AWEA Large Turbine Compliance Guidelines:

AWEA Offshore Compliance Recommended Practices (2012)

Recommended Practices for Design, Deployment, and Operation of Offshore Wind Turbines in the United States

Acknowledgments

Walt Musial, National Renewable Energy Laboratory, AWEA OCRP 2012 Subcommittee Chair
Paul Veers, National Renewable Energy Laboratory, AWEA Large Turbine Compliance Committee Chair
Suzanne Meeker, GE Energy, AWEA Standards Development Board Chair
John Dunlop, American Wind Energy Association, Senior Technical Programs Manager
Chris Long, American Wind Energy Association, Manager Offshore Wind and Siting Policy
Michele Mihelic, American Wind Energy Association, Manager, Labor, Health and Safety Policy
James Manwell, University of Massachusetts, International Electrotechnical Commission (IEC) 61400-3 Committee Liaison

AWEA OCRP 2012- Subcommittee Leaders
Subcommittee Chair—Walt Musial, National Renewable Energy Laboratory
Subcommittee Secretary—Lars Samuelsson, American Bureau of Shipping

AWEA OCRP 2012—Group 1—Structural Reliability
Group 1 Leader—Dan Dolan, MMI Engineering
Tim Camp, Garrard Hassan
John Cushing, Bureau of Safety and Environmental Enforcement
Sid Falk, Bureau of Ocean Energy Management
Robert Grimley, General Electric
Rudy Hall, Keystone Engineering
Ron Heffron, Moffatt and Nichol
Gerard Houlahan, Moffatt and Nichol
Jason Jonkman, National Renewable Energy Laboratory
Lance Manuel, University of Texas Austin
Lori Medley, Bureau of Safety and Environmental Enforcement
Rachel Pachter, Cape Wind
Matthew Palmer, Energy Management Inc.
Brian Petersen, Applied Physical Sciences Corp.
Martin Pollack, Applied Physical Sciences Corp.
Frank Puskar, Energo Engineering
Mehedi Rashid, Moffat and Nichol
Mehrdad Saidi, J P Kenny
Shashikant Sarada, Det Norske Veritas
Arvind Shah, Bureau of Ocean Energy Management
Morten Søgaard Andersen, Det Norske Veritas
Ron Young, Stress Engineering Services, Inc.
Qing Yu, American Bureau of Shipping

AWEA OCRP 2012—Group 2—Manufacturing, Installation, Construction, and Qualification Testing
Group 2 Leader—Brian Naughton, U.S. Department of Energy/New West Technologies
Chris Bintcliffe, BPP Tech
Lori Medley, Bureau of Safety and Environmental Enforcement
Ben Foley, Keystone Engineering
Rudy Hall, Keystone Engineering
Bob Holloway, J P Kenny
Scott Kaminky, Black & Veatch
Kevin Lindquist, RES-Americas, Offshore
Alex Mitzlaff, IMS
Doug Pfeister, Offshore Wind Development Coalition
Doug Price, Garrad Hassan
Hugh Rynn, Keppel AmFELS
Malcolm Sharples, Offshore Risk and Technology Consulting, Inc.
Jim Tolan, Sgurr Energy, Inc.

AWEA OCRP 2012—Group 3 Safety of Equipment, Operation/Inspection, and Decommissioning
Group 3 Leader—Robert Sheppard, Energo Engineering
John Cushing, Bureau of Safety and Environmental Enforcement
Sid Falk, U.S. Department of Interior, Bureau of Ocean Energy Management
Michele Mihelic, American Wind Energy Association
Ken Richardson, American Bureau of Shipping
Malcolm Sharples, Offshore Risk and Technology Consulting, Inc.

AWEA OCRP 2012—Contributing Members
Matthias Bauer, Management Consulting
Chris Baxter, University of Rhode Island
Sandy Butterfield, Boulder Wind Power (IECTC-88 Chairman)
Zachary Clement, Bureau of Safety and Environmental Enforcement
Jeremy Firestone, University of Delaware
Gary Norton, U.S. Department of Energy/Sentech
Adi Rabadi, CSA
Gareth Roberts, Global Marine Energy
Tony Rogers, Det Norske Veritas (DNV)/KEMA
Ralph Shaw, Keystone Engineering
Senu Sirnivas, National Renewable Energy Laboratory
Daron Threet, Holland and Knight
Bryan Uhlmansiek, Black and Veatch
Joel Whitman, Global Marine Energy
Pat Weis-Taylor, PWT Communications, LLC (Technical Editor)
Mike Woebbeking, Germanischer Lloyd
Arielle Wolfe, National Renewable Energy Laboratory (Administrative Coordinator)
Ron Young, Stress Engineering Services, Inc.

AWEA and the OCRP 2012 Subcommittee would like to thank the U.S. Department of Energy for their support in developing this document.

© 2012 by American Wind Energy Association. All rights reserved. You may download, reproduce and print this Recommended Practices document (the “Document”) for non-commercial or personal use only, and, by downloading or accessing the Document, you agree: (i) that you shall not sell or otherwise engage in commercial distribution of this Document; (ii) that you shall not make any alterations, modifications, deletions or other changes to this Document without the express written consent of American Wind Energy Association (“AWEA”); and (iii) to indemnify and hold AWEA harmless for any loss or damage, including reasonable attorney's fees, that the AWEA may incur, directly or indirectly, as a result of your use of this Document. Furthermore, in the event that you reproduce, use or distribute this Document, you shall include the following notice on all reprints or reproductions of this Document, whether print or electronic: “© 2012 by American Wind Energy Association. Reprinted with permission. All rights reserved.”

Contents

1 Scope 11

2 Normative References 12

3 Terms and Definitions 14

4 Symbols and Abbreviated Terms 19
4.1 Symbols and Units 19
4.2 Abbreviations and Acronyms 19

5 Structural Reliability 21
5.1 General 21
5.2 Hierarchy 21
5.3 Design Format 21
5.4 Standards for Component Design 22
5.5 Exposure Categories 22
5.6 Wind Turbine Classes 22
5.7 Analysis Methods 22
5.8 Soil Variation 22
5.9 Tropical Cyclones 23
5.10 Breaking Waves 23
5.11 Sea Ice Loading 23
5.12 Monopiles, Non-Jacket, and Minimal Support Structures 23
5.13 Deck Clearance 24
5.14 Grouted Connections 24

6 Manufacturing and Fabrication 25
6.1 Quality Management Systems 25
6.2 Wind Turbines for Offshore Applications 25
6.3 Electrical System 25
6.3.1 Electric Service Platform Electrical System Manufacturing Requirements 25
6.3.2 Submarine Cable (Array and Export) Manufacturing Requirements 25
6.3.3 Cable Accessories 26
6.4 Sub-structure and Foundation and Electric Service Platform Structural Fabrication 26
6.4.1 Welding 26
6.4.2 Corrosion Protection 26
6.4.3 Drawings and Specifications 26
6.4.4 Materials 26
6.4.5 Fabrication 27
6.5 Transportation of Fabricated Components to Staging Area 27
6.6 Storage at Port 27

7 Installation 28
7.1 General 28
7.1.1 Planning and Documentation 28
7.1.2 Bracing, Rigging and Installation Forces, and Allowable Stresses 29
7.1.3 Site Access 29
7.1.4 Environmental Conditions 29
7.2 Sea Transport 29
7.2.1 Loadout 29

7.2.2 Sea Fastening 30
7.2.3 Vessels and Equipment 30
7.3 Installation and Assembly 30
7.3.1 Installation Forces 30
7.3.2 Offshore Wind Turbine Foundation and Support Structure Installation 30
7.3.3 Wind Turbine Installation 31
7.3.4 Submarine Cable Installation 31
7.3.4.1 Overview 31
7.3.4.2 Cable Route Pre-Engineering / Survey 31
7.3.4.3 Cable Installation Vessel Requirements 32
7.3.4.4 Cable Load 32
7.3.4.5 Route Clearance / Pre-Lay Grapnel Run 33
7.3.4.6 Cable Installation 33
7.3.4.6.1 J-Tube Cable Pull-in 34
7.3.4.6.2 Cable / Pipeline Crossings 34
7.3.4.6.3 Cable Protection 34
7.3.4.7 Diver Intervention 35
7.3.5 Electric Service Platform Installation 35
7.3.6 Scour Protection 35

8 Qualification Testing 36
8.1 Inspection 36
8.1.1 General 36
8.1.2 Scope 36
8.1.3 Inspection Personnel 36
8.1.4 Fabrication Inspection 36
8.1.5 Loadout, Seafastening, and Transportation Inspection 36
8.1.6 Installation Inspection 36
8.1.7 Inspection Documentation 37
8.1.8 Electrical System Inspection 37
8.2 Commissioning 37

9 Safety Management System, Safety Equipment, and Navigational Aids 38
9.1 U.S. Regulations 38
9.2 Worker Health and Safety Guidance 39
9.3 Navigational Warning Devices and Marking Information 39

10 Operations and In-Service Inspections 40
10.1 U.S. Regulations 40
10.2 Operations 41
10.2.1 Maintenance Manual 41
10.2.2 Condition Monitoring 41
10.3 In-Service Inspections 41
10.3.1 General 41
10.3.2 Frequency of Inspections 42
10.3.3 Qualifications of Inspection Personnel 42
10.3.4 Subsea Support Structure Inspections 42
10.3.5 Subsea Equipment Inspections 43
10.3.6 Above-Water Support Structure and Access Systems 43
10.3.7 Blades 43
10.3.8 Blade specific guidance can be found in TA&R 650 referenced above 44
10.3.9 Inspection Scope Expansion 44
10.3.10 Post-Event Inspections 44
10.3.11 Inspection Review 44

10.3.12 Data Retention ... 45
10.4 Re-use of Facilities ... 45

11 Decommissioning ... 47
11.1 U.S. Regulations ... 47
11.2 Decommissioning Plan ... 47

12 Limitations and Addressing Gaps ... 48

13 Complete References ... 50
13.1 Reference Documents ... 50
13.2 Code of Federal Regulations ... 51
13.2.1 Title 29: Labor ... 51
13.2.2 Title 30: Mineral Resources ... 51
13.2.3 Title 33: Navigation and Navigable Waters ... 51
13.2.4 Title 46: Shipping ... 51
13.3 Standards and Guidelines ... 52

Annex A (informative) Additional Information and Guidance ... 55
A.1 Scope ... 55
A.2 Normative References ... 55
A.3 Terms and Definitions ... 56
A.4 Symbols and Abbreviated Terms ... 56
A.5 Structural Reliability ... 56
A.5.1 General ... 56
A.5.2 Hierarchy ... 57
A.5.3 Design Format ... 57
A.5.4 Standards for Component Design ... 57
A.5.5 Exposure Categories ... 57
A.5.6 Wind Turbine Classes ... 57
A.5.7 Design Methods ... 57
A.5.8 Soil Variation ... 57
A.5.9 Tropical Cyclones ... 58
A.5.10 Extreme Wave Height ... 58
A.5.11 Monopiles, Non-Jacket and Minimal Support Structures ... 58
A.5.12 Deck Clearance ... 58
A.5.13 Grouted Connections ... 59
A.6 Manufacturing and Fabrication ... 59
A.6.3 Offshore Transmission Grid or Backbone ... 59
A.7 Installation ... 59
A.7.1 General ... 59
A.7.2 Sea Transport ... 59
A.7.2.1 Loadout ... 59
A.7.2.1.1 Submarine Cable Installation ... 59
A.7.2.1.2 Cable Protection ... 60
A.7.2.1.3 Cable Burial ... 61
A.8 Qualification Testing ... 62
A.9 Safety Management System, Safety Equipment, and Navigational Aids ... 62
A.9.1 U.S. Regulations ... 62
A.9.2 Safety Management System ... 62
A.9.3 Safety Equipment ... 62
A.9.4 Access Safety ... 62
A.9.4.1 Vessel Access Safety ... 62
A.9.4.2 Helicopter Access Safety ... 62

A.9.4.3 Tower Access Safety 62
A.9.5 Navigational Warning Devices and Marking Information 62
A.10 Operations and In-Service Inspections 62
A.10.1 U.S. Regulations 62
A.10.2 Operations 63
A.10.3 In-Service Inspections 63
A.10.3.1 General 63
A.10.3.2 Frequency of Inspections 63
A.10.3.3 Qualifications of Inspection Personnel 63
A.10.3.4 Subsea Support Structure Inspections 63
A.10.3.5 Subsea Equipment Inspections 63
A.10.3.6 Above-Water Support Structure and Access Systems 63
A.10.3.7 Blades 63
A.10.3.8 Inspection Scope Expansion 63
A.11 Decommissioning 63
A.11.1 U.S. Regulations 63

Figures

Figure 1: Offshore wind project development stages 10
Figure 2: Parts of an offshore wind turbine (Source: Adapted from IEC 61400-3) 15

Tables

Table 1: Cable protection equipment characteristics 61

Foreword

In October 2009, the American Wind Energy Association (AWEA), in collaboration with the National Renewable Energy Laboratory (NREL), began the process to develop a recommended practice document based on consensus among offshore wind energy and offshore industry experts that provides advice and guidance on the best practices for design, deployment, and operation of offshore wind turbines (OWTs) in the United States. This effort was motivated by industry and regulatory concerns that no single set of guidelines and standards could be identified that addressed the complete design, deployment, and operation of offshore wind turbines, and moreover, by the fact that unique conditions exist in the United States that cannot be directly compared to conditions at European offshore wind facilities.

This AWEA effort, originally known as the Large Turbine Compliance Guidelines Initiative, has enlisted over 50 experts in the offshore wind community to develop this consensus document, now known as AWEA Offshore Compliance Recommended Practices 2012 (OCRP 2012). The intent was to create a recommended practices document which refers to current best practices in the use of existing standards for planning, designing, constructing, and operating offshore wind facilities in U.S. waters. In general this effort was not intended to write original new best practices related to the committee members' experiences.

Three groups of experts were formed to write the main body of this document. The three groups identified and recommended published standards and practices that provide methodologies for sound design of OWTs in the United States. They established the following hierarchy from the existing body of standards. First they used international standards (e.g., IEC); then national standards (e.g., American Petroleum Institute [API]); then classification society standards (e.g., Germanischer Lloyd [GL], Det Norske Veritas [DNV], The American Bureau of Shipping [ABS]); and, finally, commercial standards and guidelines. The three groups are described below.

Group 1, Structural Reliability and Design: For the design of OWTs, this group identified the appropriate interfaces between existing type certification to IEC wind turbine design classes (e.g., IEC 61400-1) and other standards governing the structural reliability of the integrated wind turbine rotor-nacelle assembly and support structure for offshore applications.

Group 2, Manufacturing and Fabrication , Construction, Installation, and Qualification Testing: For the safe and orderly deployment of OWTs, this group identified applicable standards from other industries and adapted them to cover manufacturing; construction; creation of adequate installation infrastructure (e.g., vessels); and application of qualification testing during all phases of deployment.

Group 3, Safety, Operation, Inspection, and Decommissioning: For supervision by regulators of safe operation and decommissioning of OWTs, this group identified applicable standards or practices for maintenance and inspections of wind turbine rotor-nacelle assemblies, support structures, and supporting electric infrastructure, as well as the removal of wind turbines and components at the end of their design life.

The work of these three groups has been combined into the AWEA OCRP 2012 document, Recommended Practices for Design, Deployment and Operation of Offshore Wind Turbines in the United States.

In the United States, the Bureau of Ocean Energy Management (BOEM)[1] oversees the project application and approval process for offshore wind development on the Outer Continental

[1] BOEM and the Bureau of Safety and Environmental Enforcement (BSEE) officially replaced the Bureau of Ocean Energy Management, Regulation, and Enforcement (BOEMRE) on October 1, 2011. References to BOEMRE, or its Mineral Management Service predecessor, appearing in documents referenced by this recommended practice should be considered as referring to the applicable present bureau.

Shelf where most offshore wind development is expected.[2] Figure 1 shows the different stages of the development of an offshore wind facility and the scope for each of the three groups. The three groups of this committee covered the range of development activities from assessment of the site conditions to develop the design basis through decommissioning. However, the scope of this committee did not cover activities related to early site development up to and including the necessary steps to obtain a permit or site license.

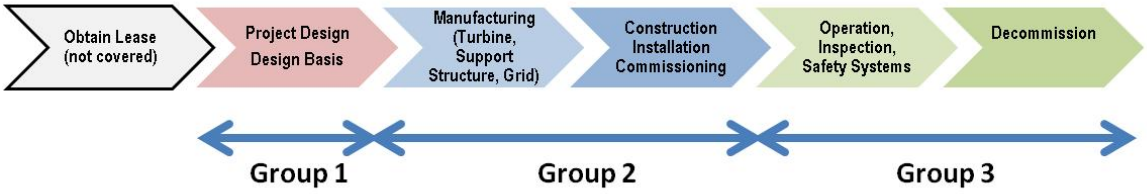

Figure 1: Offshore wind project development stages

The document is organized into 13 sections with corresponding annexes. The 13 sections in the main body of the document often point to further information contained in the annexes, which are numbered to correspond to the appropriate main body section but are considered supplemental to the information provided in the main body.

The reader should note that AWEA OCRP 2012 points to key standards and their subsections and relevant clauses throughout. As such, specific editions or versions are explicitly called out. As the industry evolves, the committee expects that new editions of normative documents will be published that will supersede older versions. This will require periodic updates of this document. For example, IEC 61400-3 is currently in its first edition; therefore all references in this document point to the first edition. The second edition is currently being developed and when it is published, AWEA OCRP 2012 will require updating. AWEA will plan to maintain this document to keep it current, but the schedule for such updates is not known at this time.

The format of this document follows the format used in most IEC standards and technical specifications under IECTC-88.

The process used to develop this document followed the AWEA Standards Development Procedures which were adopted by AWEA in 2007. AWEA is the Accredited Standards Developer under the authority of the American National Standards Institute (ANSI) for consensus wind energy standards in the United States. As such the AWEA Standards Development Procedures that were followed herein are intended to comply with ANSI Essential Requirements: Due Process Requirements for American National Standards.

Finally, compliance with this recommended practice does not relieve any person, organization, or corporation from the responsibility of observing other applicable state and federal regulations and related requirements or conducting the necessary engineering due diligence to comply with industry best practices.

---

2 Note that under Section 10 of the Rivers and Harbors Act of 1899, ACOE regulates structures and/or work in, over, or under navigable waters of the U.S. or affecting the course, location, or condition of navigable waters of the U.S. The line of jurisdiction in tidal waters extends from the Mean High Water Mark along the shoreline to 3 nautical miles (n.m.) offshore. Under the Outer Continental Shelf Lands Act, with ACOE Section 10 authority is extended to the Outer Continental Shelf, from 3 n.m. to the seaward limit of the OCS (approx. 200 n.m.).ACOE has jurisdiction over the following: artificial islands, installations, and other devices located *on* the seabed of the OCS. Under Section 404 of the Clean Water Act, the Corps regulates the discharge of dredged or fill material into waters of the United States. The ACOE line of jurisdiction in tidal waters extends from the High Tide Line along the shoreline to 3 n.m. offshore. This authority does not extend to the OCS.

1 Scope

This document applies to offshore wind facilities with bottom-fixed support structures installed either on the Outer Continental Shelf (OCS) in federal waters, or in near-shore locations such as in state waters. It is not sufficient to address the structural integrity of floating offshore wind turbines. The recommendations apply to both salt and fresh water conditions of any water depth. They apply only to turbines with a swept area greater than 200 m^2, including the rotor-nacelle assembly tower, sub-structure, and foundation. The recommendations apply to offshore wind facilities of any size, from single turbines to multiple turbine arrays. They include the electrical infrastructure as well as the electric service platform and export cable to shore. This document is not intended to address land-based wind turbines.

This consensus document points to local, national, and international standards and guidelines that are applicable for use in the United States. It addresses many unique U.S. issues including hurricanes, safety regulations, and supply chain constraints but may not provide comprehensive treatment in all areas. In areas where existing standards do not provide adequate guidance, or require adjustment or modifications, the document attempts to provide clarifications or deviations to fill specific gaps. Chapter 12 describes some of these critical gaps and the effort necessary to fill the gaps.

These recommended practices address three major areas relevant to the approval process: 1) structural reliability; 2) manufacturing, qualification testing, installation, and construction; and 3) safety of equipment, operation and inspection, and decommissioning. Note that the scope of area 3 was limited to equipment safety only. Human safety is not covered herein.

Finally, the initial planning activities for offshore wind facilities, which include site development, ecological issues, socio-economic issues, and other leasing and permitting issues, are not covered by this document (see Figure 1 Offshore wind project development stages—“Obtain Lease”).

2 Normative References

The following documents are indispensable for the application of this document.[3]

- ACI357R, *Guide for the design and construction of fixed offshore concrete structures*
- AISC 335-89, *Specification for structural steel buildings—Allowable stress design and plastic design*
- ANSI/ICEA S-93-639/NEMA WC 74, *5–46 kV shielded power cable for use in the transmission and distribution of electric energy*
- ANSI/ICEA S-94-649, *Standard for concentric neutral cables rated 5–46 kV*
- ANSI/ICEA S-97-682, *Standard for utility shielded power cables rated 5–46 kV*
- API RP 2A-WSD, 22nd Edition, *Recommended practice for planning, designing and constructing fixed offshore steel platforms—Working stress design*[4]
- API RP 2D, *Recommended practice for operation and maintenance of offshore cranes*
- API RP 2EQ, *Seismic design procedures and criteria for offshore structures*
- API RP 2GEO, *Geotechnical and foundation design considerations*
- API RP 2L, *Recommended practice for planning, designing, and constructing heliports for fixed offshore platforms*
- API RP 2MET, *Derivation of metocean design and operating conditions*
- API RP 2SIM, *Structural integrity management of fixed offshore structures*
- ASCE/AWEARP2011, *Recommended practice for compliance of large land-based wind turbine support structures*
- AWEA Standards Development Procedures, American Wind Energy Association, July 31, 2007.
- Federal Aviation Administration (FAA)AC70/7460-1K, *Obstruction marking and lighting*
- FAA AC150/5390-2C, *Heliport design*
- IEC 61400-1, *Wind turbines*—Part 1: *Design requirements*
- IEC 61400-3, *Wind turbines*—Part 3: *Design requirements for offshore wind turbines*
- IEC 61400-22, *Wind turbines*—Part 22: *Conformity testing and certification*
- ISO 19900, *Petroleum and natural gas industries—General requirements for offshore structures*
- ISO 19902, *Petroleum and natural gas industries—Fixed steel offshore structures*
- ISO 19903*, Petroleum and natural gas industries—Fixed concrete offshore structures*
- USCGCOMDTINST M16672.2D, *Navigation rules, international-inland*
- 29 Code of Federal Regulations(CFR) Part 1910, *Occupational safety and health standards*
- 30 CFR Part 585, *Renewable energy alternate uses of existing facilities on the Outer Continental Shelf*
- 33 CFR Part 67, *Aids to navigation on artificial islands and fixed structures*
- 33 CFR Parts 140 to 147, *Outer Continental Shelf activities*

———————————

[3] See Section 4.2: Abbreviations and Acronyms for the acronyms used in this Normative References list.

[4] The 22nd edition of API RP 2A WSD has been reorganized from previous editions. The API RP 2A WSD section numbers referenced herein are not applicable to the previous editions.

- 33 CFR Part 322, *Permits for structures or work in or affecting navigable waters of the United States*

See Annex A, Section A.2, of this document for a discussion concerning the referenced documents as well as additional documents that may provide information useful in satisfying the provisions of this document.

3 Terms and Definitions

For the purposes of this document, the following terms and definitions apply. For convenience, some selected definitions have been taken from IEC 61400-1 and IEC 61400-3.

3.1
accreditation
procedure by which an authoritative body gives formal recognition that a body is impartial and technically competent to carry out specific tasks such as certification, tests, specific types of tests, etc.

3.2
array cables
submarine cable conducting power generated by an offshore wind turbine (OWT) to an electric service platform or substation

3.3
certification body
body that conducts certification of conformity

3.4
current
flow of water past a fixed location, usually described in terms of a current speed and direction

3.5
design wave
deterministic wave with a defined height, period, and direction used for the design of an offshore structure; a design wave may be accompanied by a requirement for the use of a particular periodic wave theory

3.6
designer
party or parties responsible for the design of an OWT or other components of an offshore wind energy facility (e.g., electric service platforms, cables)

3.7
developer
party or parties responsible for the permitting, planning, construction, and commissioning of offshore wind facilities

3.8
electric service platform
the offshore platform that collects the power generated by the individual OWTs and steps up the voltage for transmission to the onshore grid

3.9
environmental conditions
characteristics of the physical environment (e.g., wind, waves, sea currents, water level, sea ice, marine growth, scour, and overall seabed movement) that may affect offshore wind turbine behavior

3.10
export cables
submarine cable(s) conducting power collected at an electric service platform to shore or to an offshore transmission grid (see Annex A6.3)for distribution to the land-based electric grid

3.11
external conditions (wind turbines)
factors affecting the operation of an OWT, including environmental conditions, electrical network conditions, and other climatic factors (e.g., temperature, snow, ice)

3.12
extreme wave height
expected value of the highest individual wave height (generally the zero up-crossing [see footnote 6] wave height) with an annual probability of exceedence of 1/N ("recurrence period": N years)

3.13
foundation
part of an OWT support structure that transfers the loads acting on the sub-structure into the seabed; different foundation concepts are shown in Figure 2 together with the other parts of an OWT.

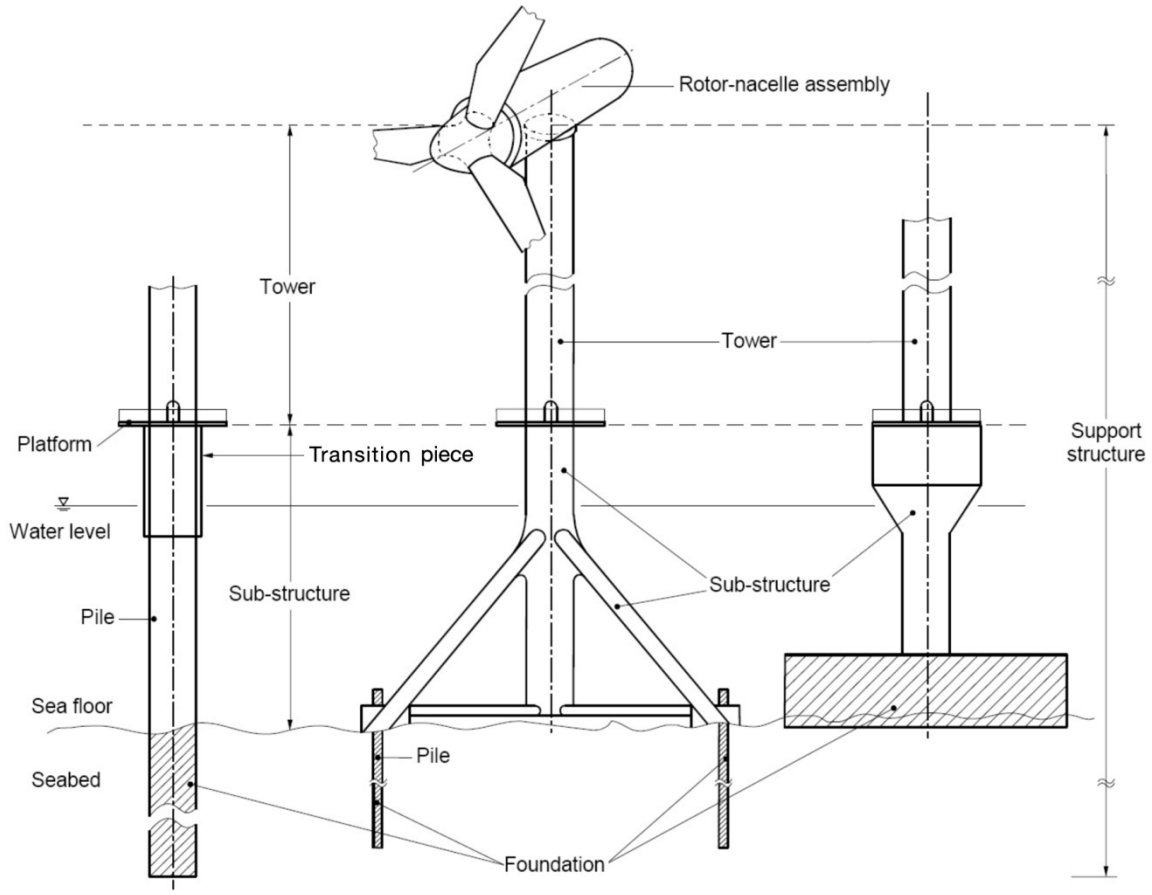

Figure 2: Parts of an offshore wind turbine (Source: Adapted from IEC 61400-3)

3.14
manufacturer
party or parties responsible for the manufacture and construction of an OWT or other components of an offshore wind facility (e.g., electric service platforms, cables)

3.15
marine growth
surface coating on structural components caused by plants, animals, and bacteria

3.16
mean sea level
average level of the sea over a period of time long enough to remove variations due to waves, tides, and storm surges

3.17
mean zero crossing period
The average time between the instances when the instantaneous water surface crosses the mean still water surface, moving in a specific direction (normally the up-crossing period).[5]

3.18
metocean
abbreviation of meteorological and oceanographic

3.19
monopile
structure type with foundation and sub-structure consisting of a single vertical pile (see Figure 2[6])

3.20
offshore wind turbine
wind turbine with a support structure that is subject to hydrodynamic loading

3.21
offshore wind turbine site
the location or intended location of an OWT either alone or within an offshore wind facility

3.22
pile penetration
distance from the sea floor to the bottom of the pile in installed position

3.23
project certification

procedure by which a certification body gives written assurance that one or more specific wind turbines including support structure and possibly other installations are in conformity with requirements for a specific site (see IEC 61400-22)

3.24
quay
a structure on the shore of a harbor where vessels dock to load and unload cargo

3.25
rotor-nacelle assembly
part of an OWT carried by the support structure (see Figure 2)

3.26
run-up
The rush of water up a structure resulting from incident waves defined by the maximum vertical height of the wave crest above the still water level.

3.27
sea floor
interface between the sea and the seabed

3.28
sea state
condition of the sea in which its statistics remain stationary

3.29
seabed
materials below the sea floor in which a support structure is founded

———————————

[5] This definition may differ from IEC 61400-3.

[6] Monopiles are equivalent to the caisson structures referred to in some offshore structural standards.

3.30
seabed movement
movement of the seabed due to natural geological and hydrodynamic processes

3.31
scour
removal of seabed soils by currents and waves or caused by structural elements interrupting the natural flow regime above the sea floor

3.32
significant wave height
statistical measure of the height of waves in a sea state, defined as 4 x σ_η where σ_η is the standard deviation of the sea surface elevation. In sea states with only a narrow band of wave frequencies, the significant wave height is approximately equal to the mean height of the highest third of the zero up-crossing waves (see footnote 7)

3.33
splash zone
external region of support structure that is frequently wetted due to waves and tidal variations; defined as the zone between:

- the highest still water level with a recurrence period of 1 year increased by the crest height of a wave with height equal to the significant wave height with a return period of 1 year, and
- the lowest still water level with a recurrence period of 1 year reduced by the trough depth of a wave with height equal to the significant wave height with a return period of 1 year

3.34
still water level
abstract water level calculated by including the effects of tides and storm surge but excluding variations due to waves; still water level can be above, at, or below mean sea level

3.35
storm surge
irregular movement of the sea brought about by wind and atmospheric pressure variations

3.36
sub-structure
part of an OWT support structure that extends upward from the seabed and connects the foundation to the tower (see Figure 2)

3.37
support structure
part of an OWT consisting of the tower, sub-structure, and foundation (see Figure 2)

3.38
tides
regular and predictable movements of the sea generated by astronomical forces

3.39
tower
part of an OWT support structure which connects the sub-structure to the rotor-nacelle assembly (see Figure 2)

3.40
transition piece
part of a monopile OWT sub-structure that provides a level connection between the tower and the pile (see Figure 2)

3.41
tropical cyclone
closed atmospheric or oceanic circulation around a zone of low pressure that originates over the tropical oceans[7]

3.42
type certification

procedure by which a certification body gives written assurance that a wind turbine type conforms to specified requirements (see IEC 61400-22)

3.43
water depth
vertical distance between the sea floor and the still water level (see the definition for still water level)

3.44
wave crest
the highest point on the water surface of an individual wave

3.45
wave direction
mean direction from which the wave is traveling[8]

3.46
wave height
vertical distance between the highest and lowest points on the water surface of an individual zero up-crossing wave (see footnote 7)

3.47
wave period
time interval between the two zero up-crossings that bound a zero up-crossing wave (see footnote 6)

3.48
zero up-crossing wave[9]
portion of a time history of wave elevation between zero up-crossings; a zero up-crossing occurs when the sea surface rises (rather than falls) through the still water level

———————————

[7] A tropical cyclone is classified as a tropical depression, tropical storm, or hurricane based on wind speed (see API RP 2MET for additional information).

[8] Wind direction, although not defined here, is measured in accordance with IEC 61400-12: Power Performance Measurements of Electricity Producing Wind Turbines, Section 6.2.

[9] The definition for zero up-crossing was taken from IEC 61400-03. To remain consistent with this standard, this definition has been retained. However, several reviewers have pointed out that the term zero up-crossing is generally applied to wave period and not to wave height. This term may need to be re-evaluated by IEC.

4 Symbols and Abbreviated Terms

For the purposes of this document, the following symbols and abbreviated terms apply in addition to those stated in IEC 61400-1:

4.1 Symbols and Units

γ_n	consequence of failure factor
kV	kilovolt(s)
n.m.	nautical miles

4.2 Abbreviations and Acronyms

ABS	American Bureau of Shipping
AC	alternating current
ACI	American Concrete Institute
ACOE	Army Corps of Engineers
ADCI	Association of Diving Contractors International
AISC	American Institute of Steel Construction
ANSI	American National Standards Institute
API	American Petroleum Institute
ASCE	American Society of Civil Engineers
AWEA	American Wind Energy Association
BOEM	Bureau of Ocean Energy Management (see footnote 10)
BOEMRE	Bureau of Ocean Energy Management, Regulation, and Enforcement (see footnote 10)
BSEE	Bureau of Safety and Environmental Enforcement[10]
CFR	Code of Federal Regulations
CIGRE	International Council on Large Electric Systems
CMS	condition monitoring system
COV	coefficient of variation
CVA	certified verification agent
DC	direct current
DNV	Det Norske Veritas
DP	Dynamic Positioning
FAA	Federal Aviation Administration
GL	Germanischer Lloyd
HVAC	high-voltage alternating current
HVDC	high-voltage direct current
IALA	International Association of Marine Aids to Navigation and Lighthouse Authorities
ICEA	Insulated Cable Engineers Association

[10] BOEM and BSEE officially replaced the BOEMRE on October 1, 2011. References to BOEMRE, or its Minerals Management Service predecessor, appearing in documents referenced by this standard should be considered as referring to the applicable present bureau.

ICPC	International Cable Protection Committee
IEC	International Electrotechnical Commission
IMCA	International Marine Contractors Association
ISIP	in-service inspection plan
ISO	International Organization for Standardization (also known as International Standards Organization)
LRFD	load and resistance factor design
NDE	non-destructive examination
NEMA	National Electrical Manufacturers Association
NREL	National Renewable Energy Laboratory
OCS	Outer Continental Shelf
OSHA	Occupational Safety and Health Administration
OWT	offshore wind turbine
ROV	remotely operated underwater vehicle
RP	Recommended Practice
SAP	Site Assessment Plan
SIMOPS	simultaneous operations
SMS	safety management system
TA&R	technology assessment & research
USCG	United States Coast Guard
WSD	working stress design

5 Structural Reliability

5.1 General

The structural design of OWT support structures for installation in U.S. OCS and U.S. State waters shall satisfy the requirements of IEC 61400-3 as modified by this document.

The electric service platform and other offshore structures that are part of offshore wind facilities in U.S. OCS and U.S. State waters and not supporting an OWT should satisfy the requirements of a recognized offshore standard (e.g., API Recommended Practice [RP] 2A-working stress design [WSD] or International Organization for Standardization [ISO] 19902) appropriate for the structure type, design format, and construction material.

5.2 Hierarchy

Neither this document nor IEC 61400-3 provides complete design guidance for OWTs; they should be supplemented with other guidelines, recommended practices, and/or standards. IEC 61400-3 includes a series of Normative References including its parent document, IEC 61400-1, and the ISO 19900 series of documents for offshore structures. Some of these documents and other documents to which they refer have conflicting information. In many cases, these conflicts occur because not all of the documents treat necessary design considerations in the same way or with the same detail, and different publication dates result in the documents incorporating differing bodies of knowledge. Designers of OWTs should endeavor to determine and select, with a certified verification agent (CVA), certification body, and/or regulatory authority approval, which of the conflicting provisions is the most appropriate and consistent with the rest of the design. In cases where this determination is not possible, the order of document priority should be as follows:

- This document (AWEA OCRP 2012)
- IEC 61400-3, *Wind turbines*—Part 3: *Design requirements for offshore wind turbines*
- IEC 61400-1, *Wind turbines*—Part 1: *Design requirements*
- ISO 19900, *Petroleum and natural gas industries—General requirements for offshore structures*
- ISO 19902, *Petroleum and natural gas industries—Fixed steel offshore structures*
- ISO 19903, *Petroleum and natural gas industries—Fixed concrete offshore structures*
- ACI357R, *Guide for the design and construction of fixed offshore concrete structures*
- API RP 2A-WSD, *Recommended practice for planning, designing and constructing fixed offshore steel platforms—Working stress design*

The order of document priority for electric service platform and other offshore structures, except OWTs, shall be as follows:

- This document (AWEA OCRP 2012)
- API RP 2A-WSD, *Recommended practice for planning, designing and constructing fixed offshore steel platforms—Working stress design*
- ISO 19903, *Petroleum and natural gas industries –Fixed concrete offshore structures*
- ACI357R, *Guide for the design and construction of fixed offshore concrete structures*

The API modified versions of the ISO 19900 series of documents have higher priority than the original ISO versions for all structure types.

5.3 Design Format

Offshore support structures have traditionally been designed using either WSD or load and resistance factor design (LRFD) methods. IEC 61400-3 uses an LRFD format consistent with ISO and provides load factors for the various wind and wave load conditions that are defined for design. This document (AWEA OCRP 2012) makes specific use of API RP 2A for

requirements that are not currently addressed within the IEC or its supporting guidelines. Given the hierarchy provided above, it is the intent of this RP that the design of wind turbine support structures should be in full conformance with IEC 61400-3, based on the LRFD design format and specific provisions of API RP 2A.

5.4 Standards for Component Design

IEC 61400-3 intends to provide a complete definition of the external conditions and load combinations that are required for the design of an OWT support structure, but it does not provide guidance for the definition of component or materials strength. As such, IEC 61400-3 makes several references to the use of "ISO offshore structural design standards or other recognized offshore standards" specifically for the definition of component design requirements and resistance factors.[11] API RP 2A-WSD is used frequently in the United States for the design of offshore oil and gas platforms, and may be used directly for the design of met tower support structures and electric service platforms that do not support wind turbines.

5.5 Exposure Categories

A medium consequence of failure should be considered as the default exposure category for an OWT support structure operating in an offshore wind facility as defined by API RP 2A-WSD (e.g., L-2). If the loss of an OWT support structure is likely to cause cessation of a significant portion of power production from the offshore wind facility, then a high consequence of failure (e.g., L-1) for that OWT support structure design may be justified.

Electric service platform structures should be designed under criteria for high consequence of failure (e.g., L-1). Other structures in an offshore wind facility (e.g., meteorological towers) may be considered as low consequence of failure (e.g., L-3) if the loss of the structure would not disrupt power production from the project. For cases in which the loss of the met tower structure would disrupt wind plant power production, the met tower structure should be considered as either medium or high consequence of failure, depending on the degree of potential power disruption. See Annex A, Section A.5.5, of this document for additional information.

5.6 Wind Turbine Classes

Wind turbine Class S, as defined in IEC 61400-1, should be used for all offshore wind projects in U.S. OCS and U.S. State waters that are subject to severe tropical cyclones that may potentially exceed the extreme conditions defined by IEC 61400-1 Class IA.

5.7 Analysis Methods

The response of the components of an OWT system is highly coupled and interdependent. The rotor-nacelle assembly and the support structure may have natural vibration characteristics with frequencies that coalesce with critical operating modes. This creates a potential for resonant behavior and substantial amplification of the dynamic response of all components. The requirements defined in IEC 61400-3 regarding the coupled analysis of the rotor-nacelle assembly and support structure shall be followed.

5.8 Soil Variation

In wind turbine design, differences between the actual soil stiffness and the soil stiffness assumed in design may result in underestimation of the dynamic response generated from the relationships between operating and structural mode frequencies. IEC 61400-3, Section 5.2 requires taking account of potential long-term time variation of dynamic soil properties due to seabed movement and scour. In addition to the IEC 61400-3 requirements, this accounting

[11] The ISO 19900 series of standards use the LRFD format. API RP 2A is available in both WSD and LRFD formats; however, the LRFD version is out of date and excludes significant and relevant updates that are available in the current WSD version.

should also consider variations in soil properties resulting from soil sampling, testing, and analysis methods, as well as the soil variability in the vicinity of the site. In order to facilitate the accounting, the assessment of soil conditions required by IEC 61400-3, Section 12.15, should also include estimates of possible variation in reported soil properties.

The designer should address the potential variation of soil properties parametrically within the analysis to ensure that dynamic response quantities are not underestimated. See Annex A, Section A.5.8, of this document for additional information.

5.9 Tropical Cyclones

Tropical cyclone conditions may have a dominant influence over the design of wind rotor-nacelle assemblies and wind turbine support structures located in areas such as the eastern coast of the United States, the Gulf of Mexico, and Hawaii that are subject to tropical cyclones. Tropical cyclones are not specifically addressed in IEC 61400-3. Tropical cyclones generate winds and waves that are characteristically different from those assumed by the IEC 61400-3 definition, including the relationship between design wind and wave conditions. These issues shall be addressed in the assessment of external conditions required by IEC 61400-3, Section 12.

In addition to the extreme conditions defined by IEC 61400-3, rotor-nacelle assemblies and wind turbine support structures subject to tropical cyclones shall be designed for those tropical cyclone conditions. The total applied environmental loading resulting from the combination of maximum wind speed and associated wave, tide, and current shall be considered. The metocean conditions associated with tropical storms typically exhibit greater variability (a larger coefficient of variation [COV]) than those associated with extra-tropical storms. In these cases, higher load factors should be used to achieve a level of overall structural reliability. The designer should address the larger wind and wave COV as part of the metocean data studies and should adjust the load factors contained herein as needed. See Annex A, Section A.5.9, of this document for additional information.

Note that the area of OWT design for tropical cyclones is currently undergoing revision within an IECTC-88 61400-3 maintenance team. The reader is advised to seek further guidance to assure that the latest information is being assimilated.

5.10 Breaking Waves

In many open ocean sites along the East Coast and in the Gulf of Mexico, the extreme wave height will be defined by the breaking wave condition for sites where water depths and extreme wave heights support their occurrence. The IEC 61400-3 requires that the calculation of wave loading include a consideration of the range in water level as this impacts both the wave crest height and water particle velocities. The designer should also consider both minimum and maximum still water elevations when evaluating breaking wave conditions to ensure that the wave slam forces used for the design of the support structure are conservative.

5.11 Sea Ice Loading

The issue of sea ice loading is not fully considered in the existing standards. The methods given in IEC 61400-3 may not be applicable in all conditions. Latest knowledge in this area is included in ISO 19906 “Petroleum and natural gas industries—Arctic offshore structures.” Special consideration to dynamic ice loading (locking) on the support structure and its combination with wind load should be given. Guidance for dynamic ice loading is given in ISO 19906.

5.12 Monopiles, Non-Jacket, and Minimal Support Structures

Offshore wind facilities typically include support structure types (e.g., monopiles) with the attributes listed in API RP 2A-WSD, Section 4.6.1.4. Additional measures are required to compensate for the lower reserve strength or lack of redundancy of these structures compared to conventional jacket structures. Sub-structures and foundations designed using the WSD method should satisfy the recommendations of API RP 2A-WSD, Section 19.

Measures equivalent to those in API RP 2A-WSD should be taken when these support structures are designed using a non-WSD method if the design standard does not address "minimum [support] structures."

These provisions apply only to structural components that contribute to the reserve strength or redundancy of the support structure. The provisions relate only to the ability of the support structure to maintain its configuration without collapsing while subjected to loading, and not to the consequences of the failure of the support structure to do so. Provisions elsewhere in this document (see Section 5.5 of this document) and in the referenced offshore standards address the life-safety, environmental, and economic consequences of a collapse. See Annex A, Section A.5.11, of this document for additional information.

5.13 Deck Clearance

All support structures subject to guidance by this document should satisfy the deck clearance provisions of API RP 2A-WSD (22nd edition) even if they are designed to other standards. These Gulf of Mexico deck clearance requirements are recommended for all other U.S. waters. See Annex A, Section A.5.12, for additional information.

5.14 Grouted Connections

The design of grouted connections between OWT transition pieces and monopiles should satisfy the requirements of a recognized standard that addresses recent field failures. The design of other (more traditional oil and gas) grouted connections, such as between piles and pile sleeves, should satisfy the requirements of API RP 2A-WSD used to design the other components of the support structure. See Annex A, Section A.5.13, of this document for additional information.

6 Manufacturing and Fabrication

6.1 Quality Management Systems

The manufacturing of components for offshore wind facilities should be performed by contractors with demonstrated manufacturing experience that employ a Quality Management System that is compliant with ISO 9001, “Quality management standard.”

6.2 Wind Turbines for Offshore Applications

The manufacturing of OWTs should be in accordance with manufacturing requirements as defined by the type certification body and in the manufacturing standard ISO 9001 referenced by the design standard IEC 61400-1. Any requirements in these standards pertaining to support structures subject to fatigue or an offshore environment should apply. Additional guidance is located in American Society of Civil Engineers(ASCE)/AWEARP2011, Section 9.

6.3 Electrical System

In an offshore wind facility, there are typically two categories of submarine cables: array cables and export cables. Array cables are characteristically medium-voltage cables, typically 34.5 kV, that link several turbines together and conduct the power generated at each wind turbine to an electric service platform. At the electric service platform, the voltage level is stepped up into the high-voltage range (typically 138, 230 or 345 kV). The total power from the facility is conducted from the electric service platform via export cables that can be routed directly to an onshore grid or to an offshore high-voltage direct current (HVDC) transmission grid (see description of Offshore Transmission Grid in Annex A6.3). Additionally, there are electrical cable accessories including hang-off clamps, terminations, splices, J-tubes, and cable protection systems.

6.3.1 Electric Service Platform Electrical System Manufacturing Requirements

International Council on Large Electric Systems (CIGRE) Study Committee B3 covers design, construction maintenance, and ongoing management of high-voltage substations and electrical installations in power stations, excluding generators. Guidance is given in the following document:

- *Guidelines for the design and construction of AC offshore substations for wind power plants* (working group B3.26), Guideline 483, December 2011.

6.3.2 Submarine Cable (Array and Export) Manufacturing Requirements

No standards currently exist for either the submarine medium-voltage array cables or the submarine high-voltage export cables. Recommended practices for various types of highly engineered products and systems used in the power distribution and transmission field are issued by CIGRE.

The typical components within the cable are three medium-voltage power cores and a 24-fiber optical cable used to supply telemetry back to a system control and data acquisition system.

For the three medium-voltage power cores, there are very detailed specifications. In North America and some Latin American countries, the Insulated Cable Engineers Association (ICEA) writes the standards used. These standards cover shielded power cables rated 5–46 kV. The specific standards used are as follows:

- ANSI/ICEA S-97-682, *Standard for utility shielded power cables rated 5–46 kV*
- ANSI/ICEA S-94-649, *Standard for concentric neutral cables rated 5–46 kV*
- ANSI/ICEA S-93-639/National Electrical Manufacturers Association(NEMA) WC 74, *5–46 kV shielded power cable for use in the transmission and distribution of electric energy*

In Europe and all other parts of the world, these cables are covered by standards written by the IEC. The specific IEC specifications are as follows:

- IEC 60502 (Parts 1 and 2), *Power cables with extruded insulation and their accessories for rated voltages from 1 kV up to 30 kV*
  - Part 1: *Cables for rated voltages of 1 kV (U_m = 1,2 kV) and 3 kV (U_m = 3,6 kV)*
  - Part 2: *Cables for rated voltages from 6 kV (U_m = 7,2 kV) up to 30 kV (U_m = 36 kV)*

For tests on submarine cables that cannot be applied as above, guidance is given in the following CIGRE publications:

- CIGRE, 1997: *Recommendations for mechanical tests on submarine cables*. *Electra*, Vol. 171,No. 3.
- CIGRE, 2000: *Recommendations for testing of long submarine cables with extruded insulation for system voltage 30 (36) to 150 (170) kV*. *Electra*, Vol. 189, No. 1.
- CIGRE, 2000: *Recommendations for testing of long AC submarine cables with extruded insulation for system voltage 30 to 170kV*. *Electra*, Vol. 189, No. 2.

The following recommendations of the CIGRE in its current version can be used for plastic-insulated direct current (DC) power cables:

- CIGRE, 2003: *Testing DC extruded cable systems for power transmission up to 250 kV*. *Electra*, Vol. 206, No. 4.

The following CIGRE recommendation can be used for DC cables with mass-impregnated paper insulation:

- CIGRE, 2005: *Recommendations for tests of power transmission DC cables for a rated voltage up to 800 kV. Electra*, Vol. 218, No. 3.

6.3.3 Cable Accessories

Typical accessories to the electrical system include cable hang-off and termination systems, joints, splices, J-tubes, cable crossings, and cable protection systems near foundation entry points. These items should be designed and manufactured in accordance with the cable manufacturer's specifications.

6.4 Sub-structure and Foundation and Electric Service Platform Structural Fabrication

6.4.1 Welding

Requirements for welding—including weld procedures, welding details, records, and documentation—and qualification of weld procedures, welders, and weld operators are given in API RP 2A-WSD, Section 13.

6.4.2 Corrosion Protection

Fabrication, application, installation, and testing of corrosion protection measures for the atmospheric, splash, and submerged zones of the sub-structure should be performed in accordance with the provisions of API RP 2A-WSD, Section 14.2. Equipment installed in the tower or rotor-nacelle assembly should adhere to guidance given in IEC 61400-3, Annex H.

6.4.3 Drawings and Specifications

The drawings and specifications for use in connection with fixed OWT support structures and foundations, electric service platforms, and related facilities are defined in API RP 2A-WSD, Section 12.

6.4.4 Materials

Requirements for the selection, supply, and fabrication of structural steel used for fixed OWT support structures and foundations and for electric service platforms are provided in API RP 2A-WSD, Sections 11.1 through 11.3.

Requirements for the selection, supply, and use of cement grout and concrete for fixed OWT support structures and foundations and for electric service platforms are provided in API

RP 2A-WSD, Section 11.4. Guidance on the selection, supply, and use of cement grout used for connections between OWT transition pieces and monopiles should follow recognized standards that address recent field failures with monopile sub-structures.

Additional requirements and information concerning structural materials supply are provided in API RP 2A-WSD, Section 14.3.

Requirements for the compilation and maintenance of records and documentation concerning materials are given in API RP 2A-WSD, Section 14.5.

6.4.5 Fabrication

Fabrication, other than welding, should be in accordance with American Institute of Steel Construction(AISC) 335-89, unless otherwise specified herein.

Additional requirements for the splicing of steel pipe, beams, and joint cans are provided in API RP 2A-WSD, Section 14.1.2.

Additional requirements for the fabrication of welded tubular connections, including fabrication sequence, joint details, weld profile control, and slotted members, are provided in API RP 2A-WSD, Section 14.1.3.

Additional requirements for the fabrication of plate girders are provided in API RP 2A-WSD, Section 14.1.4.

Each member of the support structure should be located accurately to the final fabrication tolerances given in API RP 2A-WSD, Section 14.1.5. Other tolerances not stated herein should be in accordance with the AISC 335-89.

Provisions for the fabrication of grouted pile-to-sleeve connections are given in API RP 2A-WSD, Section 14.1.6. Provisions for fabrication of the grouted connections between OWT transition pieces and monopiles should follow recognized standards that address recent field failures with monopile sub-structures.

Any temporary attachments to the support structure, such as scaffolding, fabrication, and erection aids should be limited as much as practicable. When these attachments are necessary, the requirements of API RP 2A-WSD, Section 14.1.7 should be met.

6.5 Transportation of Fabricated Components to Staging Area

The transport of OWT rotor-nacelle assembly, support structure, foundation, and electric service platform components to and from a fabrication yard and to an offshore staging area presents a complex task that requires detailed planning. Basic considerations vary with reference to the type of component foundation or platform to be transported. Items that should be considered can be found in API RP 2A-WSD, Sections 15.2.2.1 through 15.2.2.3.

6.6 Storage at Port

The fabrication contractor should be responsible for storage of materials, components, OWT support structures and foundations, and electric service platform components at the fabrication site during the onshore construction phase. It is essential that adequate space is provided that considers the overall logistics of both the onshore fabrication cycle and the offshore installation schedule. The fabrication contractor should have adequate space to store surplus completed units to address faster installation times in favorable weather conditions. Additional reserve storage at the port should be available to accommodate unplanned delays at the offshore site in order to not disrupt the onshore fabrication cycle.

7 Installation

7.1 General

The installation of OWTs should be performed in accordance with IEC 61400-3, Section 13, and the manufacturer's specifications.

Installation of electric service platforms and other structures not addressed by IEC 61400-3 should be performed in accordance with API RP 2A-WSD. See Annex A, Section A.7.1, of this document for additional information.

General guidance on marine transport and installation can be found in ISO 19901-6:2009, *Petroleum and natural gas industries—Specific requirements for offshore structures*—Part 6: *Marine operations.*

All operations at sea should comply with U.S. Coast Guard rules and regulations.

7.1.1 Planning and Documentation

Adequate planning, risk assessment, and documentation should exist to fully detail the safe offshore installation of offshore wind facilities and associated components. Component installers need to be engaged at the earliest opportunity in the offshore wind facility planning process in order to mitigate risk.

Project documentation should at a minimum follow the requirements of 30 CFR 585 for projects in federal waters. Additional documentation may differ on a project-by-project basis; however, it is recommended that project documentation include, but not be limited to, the following documents:

- Master document register
- Project administration manual
- Health, safety, and environmental manual
- Quality manual
- Engineering manual
- Construction manual

Risk assessments, including hazard and operability and hazard identification procedures, are an essential part of the installation planning process. Risk matrixes should be completed for each step of the installation procedure as part of the risk assessment planning/mitigation process.

Guidance for assessing risks during marine operations can be found in the following documents:

- ISO 19901-6, *Petroleum and natural gas industries—Specific requirements for offshore structures*—Part 6: *Marine operations*
- Section 5.4, The International Marine Contractors Association(IMCA)SEL 018, *Threat risk assessment procedure*

During the planning stage, a full engineering analysis of the installation platform, the installation deployment system, and installation methodology should be completed.

Considerations for developing the installation plan for OWTs can be found in IEC 61400-3, Section 13.2. Considerations for developing the installation plan for electric service platforms and other structures not addressed by IEC 61400-3 can be found in API RP 2A-WSD, Section 15.1.1.

Documentation responsibilities for the load out, transportation, and installation of the sub-structure and foundations and the electric service platform components are described in API RP 2A-WSD, Section 15.1.2.

7.1.2 Bracing, Rigging and Installation Forces, and Allowable Stresses

For the sub-structure, the forces and allowable stresses applicable to each phase of the installation should be determined in accordance with API RP 2A-WSD, Sections 15.1.3 and 15.1.4.

7.1.3 Site Access

Exclusion zones shall be established in coordination with the United States Coast Guard(USCG) Captain of the Port or District Commander for areas surrounding an installation. Third-party vessels shall be excluded from these zones during the construction period.

During construction operations, proper day signals or navigation lights for installation vessels shall be visible during appropriate times of day. The day signals and navigation lights shall comply with USCGCOMDTINST M16672.2D requirements governing color, placement, range of visibility, and use of lights and shapes on vessels.

Prior to commencement of installation, the USCG shall be notified so that information pertinent to construction operations can be posted as a Notice to Mariners.

Additional requirements for site access are provided in IEC 61400-3, Section 13.4.

7.1.4 Environmental Conditions

Favorable weather and sea-state conditions are essential in order to carry out activities in a safe manner. The use of an independent weather buoy to monitor the prevailing onsite wind and wave conditions is recommended on larger offshore wind facilities.

The project construction manual should contain operating weather parameters for each aspect of the operation (e.g., foundation installation, turbine installation, inter-array cable laying). These operating parameters should include a safety margin to allow for any changes in the environmental conditions. All vessels should be capable of operating within the expected prevalent weather conditions.

Weather forecasts should be required from a recognized meteorological agency that has detailed knowledge of the area of operations. Weather forecasts should be provided at 12-hour intervals and should contain forecasts for the next 24 to 48 hours, with the weather outlook for the coming 3-to5-day period. Further guidance is included in the following documents:

- IEC 61400-3, Section 13.5
- ISO 19901-6, *Petroleum and natural gas industries—Specific requirements for offshore structures*—Part 6: *Marine operations*, Section 7
- ISO 13628-5, *Petroleum and natural gas industries—Design and operation of subsea production systems*—Part 5: *Subsea umbilicals,* Section 15.4.3, *Weather window for pull-in*

7.2 Sea Transport

7.2.1 Loadout

Loadout should be performed in accordance with the appropriate sections of the installation plan as well as IEC 61400-3, Section 13.7, and API RP 2A-WSD, Section 15.2.2.4.

For vessels that lift from the water during loading operations, it should be demonstrated that the pressure from the leg spud cans or mats exerted on soils near the quay will not compromise the integrity of the quay. In addition, an adequate preload period determined for the soil properties adjacent to the quay should be complete before lifting commences. See Annex A, Section A.7.2.1, of this document for additional information.

7.2.2 Sea Fastening

Adequate ties should be designed and installed for all OWT and cargo components to prevent shifting while in transit. These ties shall be designed and installed according to the provisions of API RP 2A-WSD, Section 15.2.2.5.

7.2.3 Vessels and Equipment

A specification of all vessels to be used in the offshore installation should be provided. It should highlight vessel characteristics, including station keeping, main equipment, and lift capacity. Vessels to be used in the installation shall be classed by a USCG-recognized organization for the service performed.

The proper number of seagoing tugs should be provided according to the recommendations of API RP 2A-WSD, Section 15.2.2.6.

Barge strength and stability should be determined in accordance with API RP 2A-WSD, Section 15.2.2.3.

Requirements for cargo or launch barges are given in API RP 2A-WSD, Section 15.2.

Requirements for crane operation and maintenance are given in IEC 61400-3, Sections 13.1 and 13.12, and in API RP 2D. The provisions of 29 CFR 1926, Subpart CC may also be applicable.

7.3 Installation and Assembly

7.3.1 Installation Forces

General considerations for determining installation forces imposed on the component parts of the rotor-nacelle assembly and support structure during the operations of moving the components from their fabrication site or prior offshore location to the final offshore location, and installing the component parts to form the completed OWT, are given in API RP 2A-WSD, Section 5.4.1.

Requirements for consideration of lifting forces imposed on the structure by erection lifts during the installation stages of OWT construction are given in API RP 2A-WSD, Section 5.4.2.

Specific requirements for consideration of forces imposed on the rotor-nacelle assembly and support structure during the loadout stage of OWT construction are given in API RP 2A-WSD, Section 5.4.3.

Requirements for consideration of forces imposed on the rotor-nacelle assembly and support structure during the transportation stage of OWT construction are given in API RP 2A-WSD, Section 5.4.4.

Installation foundation loads should be calculated in accordance with API RP 2A-WSD, Section 5.4.6.

Consideration of hydrostatic pressure acting on unflooded or partially flooded members of a support structure should be in accordance with API RP 2A-WSD, Section 5.4.7.

Consideration of forces created as component parts are unloaded from their transportation vessel should be in accordance with API RP 2A-WSD, Section 5.4.8.

7.3.2 Offshore Wind Turbine Foundation and Support Structure Installation

The requirements for installation drawings are defined in API RP 2A-WSD, Section 12.7.

Installation of piles and monopiles should be performed in accordance with API RP 2A-WSD, Section 15.5.

Grouting of connections other than between OWT transition pieces and monopiles should follow API RP 2A-WSD, Section 15.5.11. Grouting of connections between OWT transition pieces and monopiles shall follow recognized standards that address recent field failures with monopile sub-structures.

Installation of jacket-type and other multi-member sub-structures should be performed in accordance with API RP 2A-WSD, Section 15.3.

Installation of concrete gravity-base support structures should be performed in accordance with ISO 19903,*Petroleum and natural gas industries—Fixed concrete offshore structures*.

7.3.3 Wind Turbine Installation

In addition to manufacturer's procedures, general guidance for wind turbine installation can be found in IEC 61400-3, Sections 13.9, 13.10, and 13.11.

7.3.4 Submarine Cable Installation

7.3.4.1 Overview

Although there is an established track record for installing interconnect cables (landfall-to-landfall) in the marine environment, most of these installations have been in largely protected water, such as a bays or sound crossings, and not in the open ocean. As a result, at this time in the case of offshore wind, there are no agreed-upon international or national standards for installation of either submarine medium-voltage array cables or submarine high-voltage export cables. Therefore, installation procedures currently rely heavily on cable installers' experience. Where standards and recommendations are not available, this document offers suggestions gained from installation experience of contributing experts.

The installation requirements covered in ISO13628-5, *Petroleum and natural gas industries—Design and operation of subsea production systems*—Part 5:*Subsea umbilicals* are sometimes used by European offshore wind facility developers and marine consultants as a guideline document for wind facility cable installation, although they are not a direct standard for power cable installation. See Appendix A, Section A.7.2.1.1, of this document for additional information.

7.3.4.2 Cable Route Pre-Engineering / Survey

The developer should submit the results of its site characterization surveys (with supporting data) to the regulatory body. Using data from the site characterization survey, the developer should complete a desktop study focusing on factors along the proposed cable route that may constrain and influence cable processes, affect system integrity, and control cost. The desktop study should contain a proposed cable route plan, which should be modified and adjusted, as required, in an iterative process as routing influences and constraints become apparent throughout the planning phase.

A burial risk index and burial matrix should be produced for the proposed cable route, giving practical and achievable target burial depths, and hence affording the required level of cable protection for the likely hazards the seabed conditions along a route may present.

Guidance for conducting a route survey can be found in the following documents:

- BOEM's *Guidelines for providing geological and geophysical, hazards, and archaeological information pursuant to 30 CFR part 585*, which covers the requirements for any site
- Standard for geotechnical site and route surveys. *Minimum requirements for the foundation of offshore wind turbines and power cable route burial assessments. Bundesamtfür Seeschiffahrt und Hydrographie*, August 2003.

Guidance for the requirements of a desktop study can be found in the following document:

- ICPC Recommendation No. 3. Issue 9A:*Criteria to be applied to proposed crossings between submarine telecommunications cables and pipelines/powercables.* Issue 2A: *Minimum technical requirements for a desktop study*.

7.3.4.3 Cable Installation Vessel Requirements

Depending on the available water depth, there are presently three main options for a cable installation platform:

- Shallow water barge/vessel capable of grounding out: 0m to 6m
- Main installation barge—minimum 6-point anchor mooring system or DP0 Class: 6m to 50m
- Main installation vessel—DP2 Class: usually over 10-m water depth under keel clearance

Correct selection of the main installation vessel and ancillary equipment is essential to successfully install the offshore wind facility cabling, and is highly dependent on a detailed awareness of site conditions combined with installation timetables and local environmental considerations. On larger-scale projects, the likelihood is that the installation solution will be made up of a number of the vessel types listed. In addition, the limited global supply of some types of installation vessels will add complexity to project scheduling.

7.3.4.4 Cable Load

Responsibility for handling of the cable at every stage should be clearly defined, and the exact point in the operation at which responsibility is transferred from one party to another should be agreed upon before operations commence.

Depending on the cable design and specification, the cable should be designated as either coilable or non-coilable.

Coilable cables should be supplied in predetermined lengths on cable reels or can be loaded as a continuous length into a static tank fitted with a loading arm.

Non-coilable cables should require a powered carousel or turntable for cable handling and movement.

To ensure that loading risk and procedures have been evaluated and agreed upon by all concerned, a detailed loading plan should be produced as part of the project construction manual. Loading trials should be undertaken to confirm suitability of the loading setup and to prove that the cable will not be compromised during the loading procedure. Cable testing through the loading of the vessel should be completed as per manufacturer recommendations and project requirements.

Recommendations for cable storage can be found in the following document:

- ISO 13628-5, *Petroleum and natural gas industries—Design and operation of subsea production systems*—Part 5: *Subsea umbilicals*, Section 12, *Storage*

Recommendations for pre-planning loadout procedures can be found in the following document:

- ISO 13628-5 *Petroleum and natural gas industries—Design and operation of subsea production systems*—Part 5: *Subsea umbilicals,* Section 14:*Loadout*

Recommendations for lift operations during a loadout can be found in the following document:

- ISO 19901-6, *Petroleum and natural gas industries—Specific requirements for offshore structures*—Part 6: *Marine operations,* Section 18
- IMCASEL 019, *Guidelines for lifting operations*

Cable acceptance testing should be completed to the manufacturer's specification and witnessed by a cable installation representative prior to commencement of the load.

7.3.4.5 Route Clearance / Pre-Lay Grapnel Run

Prior to any cable installation, a combined route will be identified that is clear of service cables, pipelines, or known obstructions. The pre-lay grapnel operation will be carried out along the proposed installation route. The pre-lay grapnel operation is carried out to ensure there are no recent physical obstructions along the proposed route, such as abandoned fishing tackle, ropes, hawsers, or wires.

7.3.4.6 Cable Installation

As part of the construction manual, a cable lay plan should be developed and agreed upon by all parties and should cover the installation sequencing and methodology between the cable landing terrestrial shore end for the export cable, or first-end deployment of inter-array cables, through to the second pull-in cable deployment for export and inter-array cables.

Careful consideration should be given to the design, planning, and installation of the cables, pull-in equipment, cable protection systems, and bell mouth centralizer at the wind turbine foundations.

The cable lay plan should highlight the maximum environmental conditions the cable can withstand without compromise.

All marine operations should be planned in order to develop procedures that are both safe and practical. The planning should be based on the use of well-proven principles, techniques, systems, and equipment to ensure acceptable health and safety levels and prevent injury and major economic losses.

An overview of the requirements for an installation operation can be found in the following document:

- ISO 13628-5, *Petroleum and natural gas industries—Design and operation of subsea production systems*—Part 5: *Subsea umbilicals*, Section 15:*Installation operations*

An overview of structural analysis methods for testing/confirming the integrity of the cable for given environmental loads through an installation can be found in the following document:

- ISO 13628-5, *Petroleum and natural gas industries—Design and operation of subsea production systems*—Part 5: *Subsea umbilicals,* Annex F (informative), *Load-effect analysis*

For a main lay barge installation platform, shallow water barge platform recommendations for single vessel and barge towing operations can be found in the following document:

- ISO 19901-6, *Petroleum and natural gas industries—Specific requirements for offshore structures*—Part 6: *Marine operations*, Section 12 and Section 17

Recommendations for transportation of heavy objects on deck, or in cargo holds of conventional vessels and supply vessels, can be found in the following document:

- ISO 19901-6, *Petroleum and natural gas industries—Specific requirements for offshore structures*—Part 6: *Marine operations,* Section 12

The following IMCA publications relate directly to cable installation requirements:

- IMCA M 125, *Safety interface document for a dynamic positioning vessel working near an offshore platform*
- IMCA M 203, *Guidance on simultaneous operations (SIMOPS)*
- IMCASEL 025, *Guidance on the transfer of personnel to and from offshore vessels*
- IMCA S 018, *Guidance on the selection of satellite positioning systems for offshore applications*

The following United Kingdom Cable Protection Committee recommendation gives guidance notes for the utilization of vessels engaged as guard/escort vessels during cable operations:

- United Kingdom Cable Protection Committee. Doc No. 4.1.5,v6. October 21, 2010

An inspection-class underwater remotely operated vehicle (ROV) may be required of both inter-array and export cables to monitor the cable touchdown point on the seabed through the installation process. Alternatively, where environmental conditions may preclude the use of an ROV, an advanced multi-beam sonar system can be used for touchdown monitoring.

7.3.4.6.1 J-Tube Cable Pull-in

A project-specific pull-in procedure should be developed as part of the project construction plan. The pull-in procedure should incorporate a pull-in analysis, which indicates the maximum potential tension exerted on the cable during the pull-in operation. The tensions should also include an appropriate dynamic amplification factor. The results of the analysis should prove the cable will not be compromised during the pull-in operation.

When designing the cable pull methodology, the installation contractor should take into account the tensile capability of the cable and the minimum bend radius of the cable layout at the J-tube structure prior to application of any additional cable protection system.

Careful consideration and effective planning should be given to the selection of the J-tube cable protection system because there are a number of different cable protection systems available for offshore wind facility installations. Factors affecting the selection of the protection system include requirements for ROV intervention—whether it is pre-installed at the J-tube or installed during operations onboard the installation vessel. All have a major effect on the working deck engineering design and layout and all influence the time taken onsite for the cable end pull-ins.

It is advisable that the installation contractor should, in conjunction with the nominated cable protection system supplier, perform trial cable pulls onshore at a test facility specifically designed to allow full-scale pull-in operations to be simulated, observed, and repeated.

Recommendations for the J-tube pull-in operations can be found in the following documents:

- ISO 13628-5, *Petroleum and natural gas industries—Design and operation of subsea production systems*—Part 5: *Subsea umbilicals*, Section 15.4:*I-tube or J-tube pull-in operations*
- ISO 19901-6, *Petroleum and natural gas industries—Specific requirements for offshore structures*—Part 6: *Marine operations*, Section 18

7.3.4.6.2 Cable / Pipeline Crossings

Installation procedures and protection requirements for cable and pipeline crossings should be agreed upon by third-party owners as part of the installation pre-engineering work.

Recommendations for cable and pipeline crossings can be found in the following documents:

- ISO 13628-5, *Petroleum and natural gas industries—Design and operation of subsea production systems*—Part 5: *Subsea umbilicals,* Section 15.15:*Pipeline crossing*
- ICPC Recommendation No. 3, Issue 9A, *Criteria to be applied to proposed crossings between submarine telecommunications cables and pipeline/power cables*

7.3.4.6.3 Cable Protection

The cable should primarily be protected by means of burial. The depth of burial or depth of cover should be determined as part of the pre-engineering design phase and should be in accordance with the permits in place for the project. The level of risk, and therefore depth of cover, should be achievable and should be more detailed in the burial risk matrix that the contractor will be required to fulfill.

There are three established methods with which to bury exposed or partially buried cable, using vehicles categorized under the following document:

- IMCA R 004, *Code of practice for the safe and efficient operation of remotely operated vehicles*, Rev. 3 July 2009 3.4 Class IV—*Towed and bottom crawling vehicles*

See Annex A, Section A.7.2.1.2, of this document for additional information.

7.3.4.7 Diver Intervention

Depending on the offshore wind project requirements, divers may be used in support of the cable installation process—either during J-tube cable end pull-ins, or for post-installation protection requirements, including mattressing. In addition, diver intervention may be required on certain plow/tractor burial systems. Guidance is included in the following documents:

- ADCI (Association of Diving Contractors International). (2004). *Consensus Standards for Commercial Diving and Underwater Operations,* 5th ed. Flagstaff, AZ: Best Publishing.
- IMCA D 042 Rev. 1, *Diver and ROV-based concrete mattress handling, deployment, installation, repositioning and decommissioning*
- IMCA R 016, *Diver and ROV-based concrete mattress handling, deployment, installation, repositioning and decommissioning*
- IMCA D 014 Rev. 1, *IMCA international code of practice for offshore diving*

7.3.5 Electric Service Platform Installation

In addition to the applicable requirements of 7.3.2 OWT Foundation and Support Structure Installation, electric service platform installation should follow the recommendations in API RP 2A-WSD, Section 15.6.

7.3.6 Scour Protection

Where scour is a possibility, it should either be mitigated through the use of methods (e.g., laying rocks or frond mats) that are suitable for the characteristics of the site or be included in the design. General scour guidance is provided in API RP 2A-WSD, Section 4.3.7.5.

8 Qualification Testing

8.1 Inspection

8.1.1 General

General considerations for quality control, inspection, and testing are given in API RP 2A-WSD, Section 16.1.

8.1.2 Scope

The scope for quality control, inspection, and testing is as defined in API RP 2A-WSD, Section 16.2.

8.1.3 Inspection Personnel

Requirements for inspection personnel are given in API RP 2A-WSD, Section 16.3.

8.1.4 Fabrication Inspection

Inspection of materials should conform with API RP 2A-WSD, Section 16.4.1.

Inspections of the support structure should be made during all phases of fabrication (e.g., pre-fabrication, rolling, forming, welding, interim storage, assembly, erection) and should be made in accordance with API RP 2A-WSD, Section 16.4.2.

Welding inspection and testing should be performed in accordance with API RP 2A-WSD Section 16.4.3.

Inspection of corrosion protection systems should be in accordance with API RP 2A-WSD, Section 16.4.4.

Inspections of all installation aids and appurtenances should be performed in accordance with API RP 2A-WSD, Section 16.4.5.

8.1.5 Loadout, Seafastening, and Transportation Inspection

Inspection should be performed for all areas related to loadout, seafastening, and transportation in accordance with API RP 2A-WSD, Section 16.5.

8.1.6 Installation Inspection

Requirements for the inspections to be made prior to lifts, launches, and upendings are defined in API RP 2A-WSD, Section 16.6.1.

Requirements for the inspections to be made for pile installation are defined in API RP 2A, Section 16.6.2. In addition, blow count records should be maintained, including both the blow count per 1m (3 ft) of penetration and the total blow count at every 1m (3 ft) of penetration, until the design penetration is achieved, the blow count limits are reached, or pile refusal is encountered. In the case of an OWT monopile, the inspection should also confirm that the monopile has been driven within the tolerances on verticality required to allow the OWT tower to be installed within the turbine manufacturer's tolerances.

Requirements for inspections to be performed for installation of the support structure are defined in API RP 2A-WSD, Section 16.6.3.

If the installation requires underwater operations, inspections should be made in accordance with API RP 2A-WSD, Section 16.6.4.

8.1.7 Inspection Documentation

API RP 2A-WSD, Section 16.7 provides requirements for the compilation and retention of data related to the inspection of the OWT generated during the fabrication, erection, loadout, and installation phases, which is in addition to data required by other parts of this document.

8.1.8 Electrical System Inspection

Post-installation cable tests are defined by the following standards:

- ICEA S-57-401/NEMA Standards Publication No.WC2, *Submarine power cables: Design, installation, repair, environmental aspects*
- IEC 60840, *Power cables with extruded insulation and their accessories. For rated voltages above 30 kV (U_m = 36 kV) up to 150 kV (U_m = 170 kV). Test methods and requirements*
- IEC 61400-3, *Offshore requirements for wind turbines.* Ed. 1, Section 14

8.2 Commissioning

Procedures for commissioning an OWT should be provided by the manufacturer of the turbine and substation. General guidance can be found in IEC 61400-3, Section 14.

9 Safety Management System, Safety Equipment, and Navigational Aids

9.1 U.S. Regulations

This section provides some of the safety and navigational regulatory documents that should be considered when siting,[12] designing, and installing offshore wind facilities in U.S. OCS waters and may be useful as guidance for U.S. State waters. Regulations other than those identified here may also be in effect. It is the responsibility of the developer to determine applicable rules and regulations that should be followed, based on the location and type of development.

- 33 CFR 140–147, *Outer Continental Shelf activities* contain USCG regulations concerning identification markings, means of escape, guard rails, life preservers, fire extinguishers, first aid kits, and so on.
- 29 CFR 1910, *Occupational Safety and Health Standards* provides Occupational Safety and Health Administration(OSHA) requirements for safe design of floors, handrails, stairways, ladders, and so on. Some of the requirements may apply in U.S. State waters.
- 33 CFR 67, *Aids to navigation on artificial islands and fixed structures* contains USCG regulations for aids to marine navigation, such as lights and foghorns on offshore structures. FAA AC70/7460-1K, *Obstruction marking and lighting,* includes requirements for the marking and lighting of wind turbines and other obstructions to aviation.
- FAA AC150/5390-2C and API RP 2L provide regulations governing the design, marking, and lighting of helicopter landing decks.
- 30 CFR 585.605 to .618, *Site assessment plan*
- 30 CFR 585.620 to .638, *Construction and operations plan*
- 30 CFR 585.640 to .657, *General activities plan*
- 30 CFR 585.701, *Facility design report*
- 30 CFR 585.702, *Fabrication and installation report*
- 30 CFR 585, Subpart H—*Environmental and safety management, inspections, and facility assessments for activities conducted under site assessment plans, construction and operations plans, and general activities plans*
  - 30 CFR 585.800 to .803, *General operating requirements*
  - 30 CFR 585.810 to .811, *Safety management systems*
  - 30 CFR 585.813, *Maintenance and shutdowns*
- 33 CFR 140–147, *Outer Continental Shelf activities*
- 33 CFR 67, *Aids to navigation on artificial islands and fixed structures*
- 46 CFR 108.231, *Application*
- 46 CFR 108 Subpart D, *Fire extinguishing systems*

See Annex A, Section A.2, of this document for additional information concerning the following documents:

- EN50308, *Wind turbines. Protective measures. Requirements for design, operation and maintenance*
- FAA Advisory Circular 70/7460-1K, *Obstruction marking and lighting*
- IALA Recommendation O-139, *The marking of man-made offshore structures*
- IEC 61400-3, Section 14.2, *Design requirements for safe operation, inspection and maintenance*
- IEC 61400-22, *Wind turbines*—Part 22: *Conformity testing and certification*

[12] General siting recommended practices are outside the scope of this document.

9.2 Worker Health and Safety Guidance

AWEA is developing guidance on offshore worker health and safety via the AWEA Health and Safety Committee. That document should be used as reference for all worker health and safety issues. Section A.9 in the Annex contains guidance information on design aspects of worker health and safety.

9.3 Navigational Warning Devices and Marking Information

The USCG sets requirements for aids to marine navigation via 33 CFR Part 67. FAA AC70/7460-1K provides requirements for marking and lighting obstructions to aviation.

Information that shall be required to obtain approval includes the following:

- Navigational warning lights, sound signals (foghorn) and markings, radar reflectors, and so on, including any flashing characteristics of the lights
- Size, color, and location on tower and platform structures of a numbering or marking system for the offshore wind facility
- Permitted colors for OWTs and associated structures, keeping in mind international standards for such towers and platforms colors required as mitigation measures, and colors that have been shown by testing to provide more acceptable visual impact
- Notices for cable location and depth, warnings of potential blade failure, and any other safety information signage

10 Operations and In-Service Inspections

10.1 U.S. Regulations

U.S. Regulation 30 CFR Part 585 contains BOEM and Bureau of Safety and Environmental Enforcement(BSEE) regulations that directly govern operations and in-service inspections for offshore wind facilities in U.S. OCS waters. Other regulations may also be in effect, particularly in U.S. State waters where the federal regulatory framework may be used as guidance. It is the responsibility of the developer to ensure that all applicable rules and regulations are followed in the development of procedures, manuals, and plans. See Annex A, Section A.10.1, of this document for additional U.S. regulations that contain relevant information but are not enforced for offshore wind installations, as well as other references that may prove useful in satisfying the regulations.

- 30 CFR 585.605 to .618, *Site Assessment Plan*(SAP)
- 30 CFR 585.620 to .638, *Construction and Operations Plan*(COP)
- 30 CFR 585.640 to .657, *General Activities Plan*(GAP)
- 30 CFR 585.701, *Facility Design Report*(FDR)
- 30 CFR 585.702, *Fabrication and Installation Report*(FIR)
- 30 CFR 585, Subpart H—*Environmental and safety management, inspections, and facility assessments for activities conducted under SAPs, COPs and GAPs*
  - 30 CFR 585.800 to .803, *General operating requirements*
  - 30 CFR 585.810 to .811, *Safety management systems*
  - 30 CFR 585.813, *Maintenance and shutdowns*
  - 30 CFR 585.820 to .825, *Inspections and assessments*
- 30 CFR 250.130, *Inspection of operations*
- 30 CFR 250.198, *Documents incorporated by reference*
- 30 CFR 250.201, *Plans and information to be submitted to the Bureau of Ocean Energy Management, Regulation, and Enforcement (BOEMRE)*
- 30 CFR 250.901, *Industry standards*
- 30 CFR 250.919, *In-service inspection plans*
- 30 CFR 282.27, *Conduct of operations*
- EN50308, Section 4.14.1, *Operator's instruction manual and maintenance manual*
- IEC 61400-3, Section 14, *Commissioning, operation and maintenance*
- ABS *Guide for building and classing bottom-founded offshore wind turbine installations*—Chapter 1, Section 3, *Surveys after construction*
- ABS *Guide for building and classing bottom-founded offshore wind turbine installations*—Chapter 6, Marine operations
- *GL guideline for certification of offshore wind turbines*, Chapter 9:*Operating manual*
- *GL guideline for certification of offshore wind turbines*, Chapter 9:*Maintenance manual*
- *GL guideline for certification of offshore wind turbines*, Chapter 11:*Periodic monitoring*
- DNV-OS-J101, *Design of offshore wind turbine structures*, Section 13:*In-service inspection, maintenance and monitoring*
- ASCE Manual 101, *Underwater investigations standard practice manual*
- API RP 2A, 21st Ed., Section 14
- BSEE Technology Assessment & Research (TA&R) 627, *Assess/develop inspection methodologies for offshore wind turbine facilities*

- BSEETA&R 650, *Inspection refinements for offshore wind turbine blades*
- BSEETA&R 633, *Template for a safety management system for offshore wind on the OCS*
- ISO 19902, *Petroleum and natural gas industries, fixed steel offshore structures*, Section 14:*Inspection and condition monitoring*
- ISO 19903, *Petroleum and natural gas industries, fixed concrete offshore structures*, Section 23:*In-service inspection and structural integrity management*

10.2 Operations

10.2.1 Maintenance Manual

A maintenance manual should be developed to track all scheduled and unscheduled maintenance activities for the offshore wind facility, including any manufacturer-specified planned maintenance procedures. Both above- and below-water equipment and systems should be included. The maintenance manual should designate safety critical equipment as noted in the safety management system(SMS) documentation. Additional information on the maintenance manual can be found in TA&R 633 referenced above.

10.2.2 Condition Monitoring

When a condition monitoring system (CMS) is used for an offshore wind facility or group of facilities, the following considerations should be included in its design:

- Operations under offshore conditions and any extreme conditions likely at the location (e.g., temperatures)
- Data storage and transmission
- Uninterruptible power supply dedicated to the condition monitoring system located on board each turbine
- Future expansion of the system

Use of a condition monitoring system should be included in the SMS, especially with respect to responding to anomalous conditions identified by the system.

The CMS used for an offshore wind facility or group of facilities should consider design guidance provided by *GL guideline for the certification of offshore wind turbines, Edition 2005* and *GL guideline for the certification of condition monitoring systems for wind turbines, Edition 2007*. ISO 19902 and 19903 contain additional information on condition monitoring.

10.3 In-Service Inspections

10.3.1 General

An in-service inspection plan (ISIP) should be developed for the offshore wind facility that addresses individual wind turbine facilities, the entire offshore wind facility, its infrastructure, and any electric service platform. The ISIP should address the topics in the following sections and should address the entire expected service life of the project. Consideration should be made for updating the ISIP as needed to address changes to the project, anomalous conditions identified, repairs, and so on.

Inspection techniques, non-destructive examination (NDE) requirements, and inspector qualifications should also be included as part of the ISIP. Structural inspections should focus on identifying damage or degradation such as dents, holes, signs of plastic strain, missing members, loose connections, crack indications, wear, and corrosion.

These requirements address structural concerns. Mechanical and electrical system components should be addressed via the operations and maintenance requirements in Sections 10.2.1 and 10.2.2 of this document.

Additional guidance on ISIP development and content can be found in TA&R 627 and 650, ABS Guide, GL and DNV Guidelines, ISO 19902 and 19002, and API RP 2A referenced above.

10.3.2 Frequency of Inspections

Various prescribed inspection frequency intervals for above- and below-water systems have been developed and may be applied to OWT structural systems. These include ASCE Manual 101 (Table 2-2, Recommended Maximum Interval Between Underwater Routine Inspections), API RP 2A (Table 14.4.2-1, Guideline Survey Intervals), BSEETA&R 627 (Table II.1, Inspection Cycles), and DNV-OS-J101 (Section 13, In-Service Inspection, Maintenance and Monitoring) referenced above. Alternatively, a risk-based approach may be used to set inspection intervals. 30 CFR 585.824 outlines the U.S. regulatory inspection expectations.

Regardless of the approach used, the following should be considered as described in TA&R 627:

- *Condition:* As facilities age, they may require more or different inspections than newer facilities
- *Consequence of Failure:* More critical systems or components may require more frequent or intensive inspections
- *Environmental Conditions:* The prevailing environmental conditions (e.g., temperature variations, wind and wave loading, seismic exposure) should be considered, especially with respect to their effect on degradation of the facility
- *Multi-Unit Offshore Wind Facilities:* Addressing all inspection needs for a multi-unit offshore wind facility within a given time frame may not be possible; inspections may have to be spread out over several years.

10.3.3 Qualifications of Inspection Personnel

It is important that personnel executing inspections have the requisite qualifications applicable to the inspections they will be performing, including the following:

- Training related to the instruments or equipment necessary for the inspections (note that safety-related training should be included in the SMS; see Section 9.2 of this document)
- Understanding of the intent of the inspection and the anomalies that are possible or prevalent
- Knowledge of how to document the inspection results, including anomalies found and positive inspection details. ASCE Manual 101, ISO 19902, and ISO 19903 provide guidance on personnel qualifications.

10.3.4 Subsea Support Structure Inspections

In addition to general inspection of the subsea support structure during inspections, more intensive inspections may be specified for critical areas, as defined during the design process—these include areas of previous damage or repair and areas known to have higher frequency of degradation, such as the following:

- Circumferential welds on monopiles
- Welded connections on braced support structures
- Major vertical members (e.g., legs, braces)
- Splash zones
- Construction joints
- Penetrations
- Embedded plates
- Corrosion protection areas (e.g., coatings and cathodic protection)

- Seabed scour areas
- Sand waves/exposure areas
- Appurtenance connections (e.g., J-tubes and cable supports)
- Settlement/subsidence areas

The splash zone region may be included in either the subsea inspections or the above-water inspections, but it is important that this region be targeted in the inspection campaign. These topics are further addressed in TA&R 627, ISO 19902 and 19903, and API RP 2A.

10.3.5 Subsea Equipment Inspections

In addition to general inspection of subsea equipment systems, more intensive inspections should be specified for critical areas, as defined during the design process, such as areas of previous damage or repair and areas known to have higher frequency of degradation. At a minimum, the following subsea equipment should be included in any general inspection:

- Risers/J-tubes and attachments to the sub-structure
- Electrical and control cables within field with particular attention to cables crossing other infrastructure
- Electrical cables to shore with particular attention to cables crossing other infrastructure
- Connectors and junction boxes

The cable inspections should periodically confirm that buried cables remain at their installed depth beneath the sea floor as discussed in TA&R 627.

10.3.6 Above-Water Support Structure and Access Systems

Inspection of the following should be emphasized during above-water structural inspections:

- Tower to sub-structure attachment
- Transition piece, including grout condition
- Access systems (e.g., ladders, walkways, boat landing, swing ropes, handrails, helipads, helicopter abseil platforms) and lifting systems
- Appurtenances and attachments (e.g., J-tubes)
- Coating condition
- Nacelle structural integrity
- Overall facility inclination (i.e., determining if the facility leans due to structural deformation, differential settlement, or other causes)
- Areas of previous damage or repair

Further guidance on above water inspections is contained in TA&R 627, ISO 19902 and 19903, and API RP 2A, as well as in the ABS Guide and GL and DNV guidelines referenced in 10.1 above.

10.3.7 Blades

Physical inspection of the blades should focus on damage and degradation that can be identified by either remote visual inspection (e.g., via binoculars or other optical device) or internally through the root of the blade. Condition monitoring can provide information regarding lightning strikes. The requirements for lightning protection are covered in IEC 61400-24. The physical blade inspection includes identifying the following:

- Leading- and trailing-edge erosion
- Lightning damage
- Bond separation or failures, especially along the leading and trailing edges
- Areas of previous damage or repair

Consideration should be made for expanding the inspection scope and the use of NDE techniques (e.g., ultrasonic) when damage is identified or when anomalies are identified in blades of the same or similar design. Access issues should be addressed to provide a safe means of performing activities that may require close inspection of the blades.

10.3.8 Blade specific guidance can be found in TA&R 650 referenced above.

10.3.9 Inspection Scope Expansion

The ISIP should include provisions for expanding the inspection scope when planned inspections identify anomalies. This expansion may include a more thorough examination of the area around the anomaly, additional inspections for that facility, or additional inspections throughout the offshore wind facility. This expansion may need to be defined based on an engineering review of the data from the planned inspection or could be defined as automatic depending on the anomaly identified. The ISIP may include details of what is considered an anomaly for various common conditions (e.g., crack indications, corrosion, and erosion) to aid in this process. ASCE Manual 101 provides guidance on expanding scope based on inspection findings using the term “special inspection,” and additional information can be found in ISO 19902 and 19903 referenced above.

10.3.10 Post-Event Inspections

Environmental events that impose loads on the offshore wind turbines and other structures near or above the design level loading (e.g., hurricanes or earthquakes) may trigger an inspection program for the offshore wind facility. Generally, regulators should consider inspections after load events that can be reasonably estimated to have approached a design limit state, but mandatory inspections may be imposed at lower load levels if sufficient evidence of possible damage is present. These inspections should be planned in the ISIP and should identify specific areas that are likely to have experienced high stresses as shown by design analyses.

Equipment systems and structural appurtenances may experience damage even if there is no significant structural damage. Evaluation of these components should also be part of a post-event inspection plan.

This concept is further discussed in TA&R 627, Section 14.4.3 of API RP 2A, and ISO 19902 and 19903. 30 CFR 585.825 contains U.S. regulatory expectations for assessments, including inspections.

10.3.11 Inspection Review

Inspection results should be reviewed after each inspection whether it is planned, post-event, or triggered by some other event. This review ensures the following:

- The inspections were performed as planned and have been adequately documented
- Results of the inspection are incorporated into an updated ISIP as needed
- Any anomalous conditions are dealt with in a timely manner, including:
  - cleared as is with follow-up inspections scheduled as needed;
  - identified for further investigation either through additional inspections or analysis to determine further action (e.g., repairs); and
  - addressing similar areas on other facilities in the offshore wind facility, as appropriate

The engineers performing the review should be familiar with inspections and the interpretation of inspection results. It is preferable, although not required, that they are also either familiar with the facility design and its operation or are familiar with the ISIP development and execution.

Additional information on review of inspection data can be found in TA&R 627, ISO 19902, and ISO 19903 as referenced in 10.1 above.

10.3.12 Data Retention

Regulators may require various levels of data reporting that is facilitated by establishing a data collection and retention process within the ISIP. Additionally, this data collection allows responsible personnel to be able to evaluate the current condition of the offshore wind facilities and update the ISIP as necessary. The concept of data retention and its use is further discussed in TA&R 627 and ISO 19902 and 19903.

The ISIP should also indicate data reporting requirements for each inspection activity that should include the following:

- Data collection checklists and expected data to be reported for each activity
- Requirements for anomaly measurements
- Requirements for photographs and videos

10.4 Re-use of Facilities

It may be necessary or desirable to install a new turbine (with or without a new tower) on an existing sub-structure and foundation, or to move an existing turbine (with or without a new tower) to a new sub-structure and foundation. This would constitute a re-use with the following special considerations:

- Re-use of an existing sub-structure and foundation requires that:
  - the full design process be repeated as if the entire installation were new and all new design checks must be satisfied. Strength checks may be waived if the new turbine system being installed is substantially identical to the previously installed turbine system.
  - fatigue checks account for the damage accumulation from the previous service life. The safety factor on previously accumulated damage should be the same as that for a new design. All welds should be subjected to 100% NDE and found to be undamaged, or repaired if damage is found. The safety factor for future damage should be the same as that for a new design.
- Re-use of an existing turbine system (with or without a new tower structure) requires that:
  - the full design process be repeated as if the entire installation were new and all new design checks should be satisfied. It is recommended that any type certification for the turbine system be renewed or reviewed by the certifying body.
  - fatigue checks account for the damage accumulation from the previous service life. The safety factor on previously accumulated damage should be the same as that for a new design. All welds should be subjected to 100% NDE and found to be undamaged, or repaired if damage is found. The safety factor for future damage should be the same as for new design.
- For either turbine system or sub-structure and foundation re-use, a thorough inspection of the re-used structure should be undertaken with NDE, and other testing used where appropriate. The intent is to establish the condition of the support structure and identify any existing damage so it can be repaired or incorporated into the design considerations. Additional guidance on re-use inspections can be found in API RP 2A-WSD, Section 18.2.4.

Modifications to an existing turbine may also constitute a re-use. For example, replacement of turbine blades with blades of a different design, or upgrades to turbine mechanical and control systems that cause rotational speeds to change from those obtained with the previous turbine for the same wind history, are equivalent to installing a new turbine on an existing sub-structure.

Installation of a replacement turbine does not constitute a re-use provided the replacement is identical to the existing turbine and the service life of the facility is not extended. In order for the turbines to be considered identical, the designer should present analysis to demonstrate that no significant change to the dynamic properties, rotational velocities, aerodynamic

characteristics, or loading of the sub-structure were introduced in the design of the new turbine.

In addition to API RP 2A, re-use is also discussed in ISO 19902, A.16.12.

11 Decommissioning

11.1 U.S. Regulations

U.S. Regulation 30 CFR Part 585 Subpart I contains BOEM and BSEE regulations directly related to the decommissioning of offshore wind facilities in U.S. OCS waters. Also see Annex A, Section A.11.1 of this document.

11.2 Decommissioning Plan

As part of the project development process, a decommissioning plan should be created that addresses how the facilities should be decommissioned and removed once the facility is no longer in use either because it is no longer needed or it has been too damaged to continue operations. The plan should consider the following:

- Regulatory requirements
- Removal or decommissioning of the rotor-nacelle assembly and above-water support structure and equipment
- Removal or decommissioning of below-water support structure and equipment, usually to 5m below the sea floor
- Removal or decommissioning of array cabling and systems
- Removal or decommissioning of export cable

12 Limitations and Addressing Gaps

The purpose of AWEA OCRP 2012 is to direct the user to standards and guidelines that exist in the international wind energy community that can be appropriately applied to the design and deployment environment that is unique to the United States, both in state and federal waters. As of this writing, there are no offshore wind facilities in the United States, so much of the guidance put forward by this document is derived from experience in other countries (e.g., countries in Europe) and other industries (e.g., oil and gas, subsea cable, marine vessels). In some cases, a standard or guideline for a specific offshore wind design, installation, or operational step does not exist or is translated to the less mature offshore wind space with a higher degree of uncertainty. Moreover, even in more mature industries, no standard or guideline provides a perfect roadmap to success because documented practices and scientific understanding significantly lag experience. Gaps, inaccuracies, and ambiguous interpretations of the standards will introduce project risk and can lead to failures, inefficiencies, cost overruns, and poor performance if they are not properly addressed.

For offshore wind facility design, installation, and operation, there is no substitute for rigorous engineering at the component and systems level. In addition, a third-party engineering review is an essential part of the regulatory process in state or federal waters. The review should be inclusive of all major systems of the facility, including the blades, turbine control systems, towers and sub-structures, array cables, export cables, and the electric service platform. It should also include an oversight assessment of the design, manufacturing, construction, transportation, vessels, installation, commissioning, operations, and decommissioning plan during each stage of the project. The engineering and third-party evaluations should remain consistent with Type and Project certification, which are mandatory for compliance with IEC 61400-1, 61400-3, and 61400-22, and guidelines used by major certifying bodies.

Under the current regulations (30 CFR 585) promulgated by BOEM in 2010, developers in U.S. federal waters may be required to retain a CVA to formally serve as their third-party reviewer, although the responsibility for final approval is with BOEM. The exact role of the CVA is not described thoroughly in 30 CFR 585; however, some suggested roles and expected qualifications of the offshore wind facility CVA are described in the following National Academies report:

- Transportation Research Board, National Academies, “Structural Integrity of Offshore Wind Turbines: Oversight of Design, Fabrication, and Installation,” Committee on Offshore Wind Energy Turbine Structural and Operational Safety, April 2011.

According to the National Academies report, in evaluating potential CVAs, the developer “should work closely with the [regulators] to seek organizations and individuals that are independent and objective, have the necessary expertise, have a management structure with well-defined roles and responsibilities with oversight by a registered professional engineer, and have an auditable quality plan and record-keeping processes.”

Due to the complexity of the projects and the desire to facilitate the introduction of new innovations and technology, the industry and regulators should accept that standards are incomplete and should be willing to take the necessary steps to safely move forward. The designers, developers, certifying bodies, and third-party engineers all play a role in ensuring that the offshore wind facility is deployed in a safe and orderly manner with minimal disruption to the environment.

Section 3.11 of the 2011 National Academies report provides a more detailed list of some gaps that have been identified to date as they pertain to installations in U.S. waters. The issues described in this section should be fully addressed at the design stage—they include but are not limited to the following:

- Incomplete coverage of hurricane design conditions
- Recent issues with monopile grout failures
- Uncertainties in addressing soils strength
- Ice loading (e.g., Great Lakes)
- Design assessment of breaking waves

- Gravity-based support structure installation and design
- Extrapolations to larger turbine sizes
- Floating systems

The following is a list of broad subjects pertaining to offshore wind facilities that are not addressed adequately by this edition or the existing standards in guidelines of the industry at large:

- Appropriate design standards for offshore structures supporting wind turbines constructed of materials other than structural steel, such as reinforced concrete
- Guidance for structural types, such as gravity structures and suction pile foundations
- Manufacturing requirements for rotor-nacelle assembly control and protection systems, mechanical systems, and electrical systems for OWTs
- Appropriate standards for submarine cable installation

13 Complete References

13.1 Reference Documents

ACI357R, *Guide for the Design and Construction of Fixed Offshore Concrete Structures*

ADCI (Association of Diving Contractors International). (2004). *Consensus Standards for Commercial Diving and Underwater Operations*, 5th ed. Flagstaff, AZ: Best Publishing.

AMEC Energy.(2004). "Blyth Harbour Wind Farm—Operational Aspects."Technical report for DTI New and Renewable Energy Programme. London: Department of Trade and Industry.

ASCE Manual 101 (see Childs 2001). *Underwater investigation: Standard practice manual*

BERR (Department for Business Enterprise & Regulatory Reform). (2008). "Offshore Wind Capital Grants Scheme. Scroby Sands Offshore Wind Farm 3rd Annual Report January 2007–December 2007." London: BERR.

BOEMRE. (2011). "Guidelines for Providing Geological and Geophysical, Hazards, and Archaeological Information Pursuant to 30 CFR Part 585." Washington, D.C.: U.S. Department of the Interior.

BSEE. (2011). *Offshore Electrical Cable Burial for Wind Farms: State of the Art, Standards and Guidance & Acceptable Burial Depths, Separation Distances and Sand Wave Effect*. Technology Assessment and Research Report Number 671. Washington, D.C.: U.S. Department of the Interior, Bureau of Safety and Environmental Enforcement.

BSH. (2003).*Standard for Geotechnical Site and Route Surveys.Minimum Requirements for the Foundation of Offshore Wind Turbines and Power Cable Route Burial Assessments*. Hamburg, Germany: Bundesamtfür Seeschifffahrt und Hydrographie.

Childs, K.M. Jr. (2001). *Underwater Investigation: Standard Practice Manual*. Manual of Practice No. 101.Sponsored by Ports and Harbors Task Committee on Underwater Investigation of the Coasts, Oceans, Ports and River Institute. Reston, VA: ASCE.

CIGRE (Conference Internationale des Grandes Reseaux Electriques).(1997). "Recommendations for Mechanical Tests on Submarine Cables."*Electra* (171:3).

CIGRE.(2000a). "Recommendations for Testing of Long AC Submarine Cables with Extruded Insulation for System Voltage 30 (36) to 150 (170) kV."*Electra* (189:1).

CIGRE.(2000b). "Recommendations for Testing of Long AC Submarine Cables with Extruded Insulation for System Voltage 30 to 170kV."*Electra* (189:2).

CIGRE.(2003). "Testing DC Extruded Cable Systems for Power Transmission up to 250kV."*Electra* (206:4).

CIGRE.(2005). "Recommendations for Tests of Power Transmission DC Cables for a Rated Voltage up to 800kV."*Electra* (218:3).

CIGRE.(2011). "Guidelines for the Design and Construction of AC Offshore Substations for Wind Power Plants (working group B3.26)," Guideline 483.

Garrad Hassan and Partners Ltd. (2003). "Garrad Hassan Report—Review of Offshore Wind Farm Project Features," Appendix 3-F. Prepared for U.S. Army Corps of Engineers.

Mudrić, M. (2010)."Rights of States Regarding Underwater Cables and Pipelines." *Australian Resources & Energy Law Journal* (29:2). ICPC Recommendation No. 9.

OSHA 3149.(n.d.)*Construction Resource Manual*. Washington, D.C.: Occupational Safety and Health Administration

Renewable UK.(2010). *Guidelines for Onshore and Offshore Wind Farms—Health and Safety in the Wind Energy Industry Sector*. London: Renewable UK.

Renewable UK and Crown Estate (2011). "Guidance Notes for the Utilisation of Vessels Engaged as Guard/Escort Vessels During Cable Operations," Revision C, December 16.

Transportation Research Board, National Academies. (2011). “Structural Integrity of Offshore Wind Turbines: Oversight of Design, Fabrication, and Installation,” Committee on Offshore Wind Energy Turbine Structural and Operational Safety, April 2011.

UKCPC.(2010). “Doc No. 4.1.5 v6.”United Kingdom Cable Protection Committee.

Worzyk, T. (2009).*Submarine Power Cables: Design, Installation, Repair, Environmental Aspects. ICEA No.S-57-401/NEMA Standards Publication No.WC2*. Heidelberg, Germany: Springer-Verlag.

13.2 Code of Federal Regulations

13.2.1 Title 29: Labor

29 CFR 1926 subpt. CC, *Safety and health regulations for construction*
29 CFR 1926.605, *Safety and health regulations for construction—Marine operations and equipment*
29 CFR 1910, *OSHA*

13.2.2 Title 30: Mineral Resources

30 CFR 250, *Oil and gas and sulphur operations in the outer continental shelf*
30 CFR 250.1725, *When do I have to remove platforms and other facilities?*
30 CFR 250.1752, *How do I remove a pipeline?*
30 CFR 250.902, *What are the requirements for platform removal and location clearance?*
30 CFR 282, *Approved underground storage tank programs*
30 CFR 585, Subpart H, *Environmental and safety management, inspections, and facility assessments for activities conducted under SAPs, COPs and GAPs*
30 CFR 585.605–.618, *Site Assessment Plan (SAP)*
30 CFR 585.620–.638, *Construction and Operations Plan (COP)*
30 CFR 585.640–.657, *General Activities Plan (GAP)*
30 CFR 585.701, *Facility Design Report (FDR)*
30 CFR 585.702, *Fabrication and Installation Report (FIR)*
30 CFR 585.800–.803, *Safety and environmental requirements*
30 CFR 585.810, *What must I include in my Safety Management System?*
30 CFR 585.811, *When must I follow my Safety Management System?*
30 CFR 585.813, *When do I have to report removing equipment from service?*
30 CFR 585 Subpart I, *Decommissioning*
30 CFR 585, *Renewable energy alternate uses of existing facilities on the outer continental shelf*

13.2.3 Title 33: Navigation and Navigable Waters

33 CFR 67, *Aids to navigation on artificial islands and fixed structures*
33 CFR 140–147, *Outer continental shelf activities*
33 CFR 143.1341 (see A.2)
33 CFR 146 Subch. N, *Outer continental shelf activities*
33 CFR 322, *Permits for structures or work in or affecting navigable waters of the United States*

13.2.4 Title 46: Shipping

46 CFR 108, *Design and equipment*
46 CFR Chapter 1, *Coast Guard, Department of Homeland Security*
46 CFR 108.231, *Application*
46 CFR 108 Subpart D, *Fire extinguishing systems*

13.3 Standards and Guidelines

ABS *Guide for building and classing bottom-founded offshore wind turbine installations*
ABS *Rules for building and classing offshore installations*
ABS *Guide for building and classing mobile offshore units*

AISC 335-89, *Specification for structural steel buildings—Allowable stress design and plastic design*
ANSI/ICEA S-93-639/NEMA WC 74, *5–46 kV Shielded power cable for use in the transmission and distribution of electric energy*
ANSI/ICEA S-94-649, *Standard for concentric neutral cables rated 5–46 kV*
ANSI/ICEA S-97-682, *Standard for utility shielded power cables rated 5–46 kV*

API Bulletin 2HINS, *Guidance for post-hurricane structural inspection of offshore structures*
API Bulletin 2INT-EX, *Interim guidance for assessment of existing offshore structures for hurricane conditions*
API RP 2A-WSD, 22nd ed., *Recommended practice for planning, designing and constructing fixed offshore steel platforms—working stress design*
API RP 2D, *Recommended practice for operation and maintenance of offshore cranes*
API RP 2EQ, *Seismic design procedures and criteria for offshore structures*
API RP 2GEO, *Geotechnical and foundation design considerations*
API RP 2L, *Recommended practice for planning, designing, and constructing heliports for fixed offshore platforms*
API RP 2MET, *Derivation of metocean design and operating conditions*
API RP 2N, *Recommended practice for planning, designing and constructing structures and pipelines for arctic conditions*
API RP 2SIM, *Recommended practice for structural integrity management of fixed offshore structures*

ASCE Manual 101, *Underwater investigation: standard practice manual* (see Childs 2001)
ASCE/AWEARP2011, *Recommended practice for compliance of large land-based wind turbine support structures*

Bureau of Safety and Environmental Enforcement (BSEE) Technology Assessment & Research (TA&R) Program documents:

BSEETA&R 627, *Assess/develop inspection methodologies for offshore wind turbine facilities*
BSEETA&R 633, *Wind farm/turbine accidents and the applicability to risks to personnel and property on the OCS, and design standards to ensure structural safety/reliability/survivability of offshore wind farms on the OCS*
BSEETA&R 650, *Offshore wind turbine inspection refinements*
BSEETA&R 651, *Evaluate the Effect of Turbine Period of Vibration Requirements on Structural Design Parameters*
BSEETA&R 656, *Seabed Scour Considerations*
BSEETA&R670, *Design Standards for Offshore Wind Farms*
BSEETA&R 671, *Offshore Electrical Cable Burial for Wind Farms: State of the Art; Standards and Guidance; Acceptable Burial Depths and Separation Distances; and Sand Wave Effects*

Det Norske Veritas (DNV) documents:
DNV-OS-D101, *Marine and machinery systems and equipment*
DNV-OS-J101, *Design of offshore wind turbine structures*
DNV-OS-J201, *Offshore substations for wind farms*
DNV-OS-J301, *Standard for classification of wind turbine installation units*
DNV-RP-J101, *Use of remote sensing for wind energy assessments* (Recommended Practice)

EN50308, *Wind turbines—Protective measures—Requirements for design, operation and maintenance*

FAA Advisory Circular, AC150/5390-2C, *Heliport design*
FAA AC70/7460 1K, *Obstruction marking and lighting*

GL Renewables Certification.(2005). "Guideline for the Certification of Offshore Wind Turbines." Hamburg, Germany: Germanischer Lloyd.

International Association of Marine Aids to Navigation and Lighthouse Authorities (IALA) document:
IALA Recommendation O-139, *The marking of man-made offshore structures*

ICEA S-57-401/NEMA Standards Publication No.WC2 (see Worzyk 2009), *Submarine power cables: Design, installation, repair, environmental aspects*

ICPC Recommendation No. 3, Issue 9A (see Murdrić 2010) *Criteria to be applied to proposed crossings between submarine telecommunications cables and pipelines/power cables*

IEC 60502-1, *Power cables with extruded insulation and their accessories for rated voltages from 1 kV (U_m = 1,2 kV) up to 30 kV (U_m = 36 kV)*—Part 1: *Cables for rated voltages of 1 kV (U_m = 1,2 kV) and 3 kV (U_m = 3,6 kV)*
IEC 60502-2, *Power cables with extruded insulation and their accessories for rated voltages from 1 kV (U_m = 1,2 kV) up to 30 kV (U_m = 36 kV)*—Part 2: *Cables for rated voltages from 6 kV (U_m = 7,2 kV) up to 30 kV (U_m = 36 kV)*
IEC 60840, *Power cables with extruded insulation and their accessories. For rated voltages above 30 kV (U_m = 36 kV) up to 150 kV (U_m = 170 kV). Test methods and requirements*
IEC 61400-1, *Wind turbines*—Part 1: *Design requirements*
IEC 61400-3, *Wind turbines*—Part 3: *Design requirements for offshore wind turbines*
IEC 61400-22, *Wind turbines*—Part 22: *Conformity testing and certification*
IEC 61400-24, *Wind turbines*—Part 24: *Lightning protection*

International Marine Contractors Association documents:
IMCA D 014 Rev. 1, *IMCA international code of practice for offshore diving*
IMCA D 042 Rev. 1, *Diver and ROV-based concrete mattress handling, deployment, installation, repositioning and decommissioning*
IMCA M 125, *Safety interface document for a dynamic positioning vessel working near an offshore platform*
IMCA M 149, *Common marine inspection document*
IMCA M 187, *Guidelines for lifting operations* (same as IMCASEL 019)
IMCA M 202, *Guidance on the transfer of personnel to and from offshore vessels*
IMCA M 203, *Guidance on SIMOPS*
IMCA R 004, *Code of practice for the safe & efficient operation of remotely operated vehicles* Rev. 3 July 2009 3.4 Class IV—Towed and Bottom Crawling Vehicles
IMCA R 016, *Diver and ROV-based concrete mattress handling, deployment, installation, repositioning and decommissioning*
IMCA S 018, *Guidance on the selection of satellite positioning systems for offshore applications*
IMCASEL 018, *Threat risk assessment procedure*
IMCASEL 019, *Guidelines for lifting operations*
IMCASEL 025, *Guidance on the transfer of personnel to and from offshore vessels*

International Standards Organization or International Organization for Standardization documents:
ISO 2394, *General principles on reliability for structures*
ISO 9001, *Quality management standard*
ISO 13628-4, *Petroleum and natural gas industries—Design and operation of subsea production systems*—Part 4: *Subsea wellhead and tree equipment*
ISO 13628-5—*Petroleum and natural gas industries—Design and operation of subsea production systems*—Part 5: *Subsea umbilicals*
ISO 13688, *Protective clothing—General requirements*
ISO 14688-1, *Geotechnical investigation and testing–- Identification and classification of soil*—Part 1: *Identification and description*
ISO 13628-5 *Petroleum and natural gas industries—Design and operation of subsea production systems*—Part 5: *Subsea umbilicals*
Annex F (informative), *Load-effect analysis*

Section 12, *Storage*
Section 14, *Loadout*
Section 15, *Installation operations*
Section 15.4, *I-tube or J-tube pull-in operations*
Section 15.4.3, *Weather window for pull-in*
Section 15.15, *Pipeline crossing*

ISO 19900, *Petroleum and natural gas industries—General requirements for offshore structures*
ISO 19901-4 *Petroleum and natural gas industries—Specific requirements for offshore structures*
ISO 19901-6 (2009) *Petroleum and natural gas industries—Marine operations*
ISO 19902,*Petroleum and natural gas industries—Fixed steel offshore structures*
ISO 19903*, Petroleum and natural gas industries—Fixed concrete offshore structures*
ISO 19906*, Petroleum and natural gas industries—Arctic offshore structures.*

USCGCOMDTINSTM16672.2D, (U.S. Coast Guard Commandant Instruction) *Navigation rules, international—inland*

Annex A
(informative)

Additional Information and Guidance

Note: The sections in this annex provide additional information and guidance on the related sections in the body of this document. The same numbering system and heading titles have been used for ease in identifying the subsection in the body of this document to which it relates.

A.1 Scope

No additional information.

A.2 Normative References

API RP 2A is available in both WSD and LRFD formats; however, the LRFD version is out of date and excludes the significant and relevant updates that are available in the more recent WSD editions. ISO 19902 originated as an update to the LRFD version of RP 2A, but it is significantly expanded and reorganized. It contains many of the updates found in RP 2A-WSD. As of 2012, API is preparing a new edition of the LRFD version of RP 2A based on ISO 19902. It is anticipated that the new LRFD document, once it has been issued, will replace ISO 19902 as a normative reference in future editions of this AWEA document.

As part of the API effort to align its offshore structural documents with ISO documents, significant portions of RP 2A-WSD previously contained in the 21st and earlier editions of the document have been removed from the 22nd edition. Many of the removed portions are being issued as separate documents that are modifications of corresponding ISO documents. Use of these API versions is encouraged for both WSD and LRFD design formats because many of the modifications are specific to U.S. practice. API RP 2GEO, based on ISO 19901-4, is already available in 2012. API RP 2MET, based on ISO 19901-1, and API RP 2EQ, based on ISO 19901-2, are still in preparation as of early 2012. The corresponding ISO documents are recommended until the API versions are issued. However, it should be noted that the wind description given therein, especially for turbulence, wind spectra, and wind profile, are not sufficient for the analysis of offshore wind turbines. For the analysis of OWT either the methods given in IEC 61400-3 and IEC 61400-1, Annex B should be used, or alternatively those given in GL and DNVJ101 Guidelines.

The survey and assessment of existing platforms guidance contained in previous editions of API RP 2A-WSD has been relocated from the 22nd edition to API RP 2SIM. Although ISO 19902 retains its survey and assessment guidance, there is no separate ISO document corresponding to API RP 2SIM. API RP 2SIM is still in preparation as of early 2012. Reference to Section 14 (*Surveys*) and Section 17 (*Assessment of existing platforms*) in the 21st edition of API RP 2A-WSD, including API Bulletins 2HINS and 2INT-EX, if applicable, is recommended until API RP 2SIM is issued.

The USCG regulations in 33 CFR Parts 140 through 147 are written to apply to mineral extraction activities in the U.S. OCS. While these regulations may not be directly applicable to renewable energy activities, they do provide “best practice” guidance. The USCG has proposed revisions to these regulations, which were published in the *Federal Register* on December 7, 1999 (Vol. 64, No. 234) but remain in development as of early 2012.

In addition to the documents listed in Section 2, the following documents contain information useful in fulfilling the requirements of this document. For dated references, only the edition cited applies. For undated references, the latest edition of the referenced document (including any amendments) applies.

- DNV-OS-J201, *Offshore substations for wind farms*
- ISO 19901-6 (2009) *Petroleum and natural gas industries—Marine operations*

- API RP 2N, *Recommended practice for planning, designing and constructing structures and pipelines for arctic conditions*
- API Bulletin 2HINS, *Guidance for post-hurricane structural inspection of offshore structures*
- API Bulletin 2INT-EX, *Interim guidance for assessment of existing offshore structures for hurricane conditions*
- ABS *Rules for building and classing offshore installations*
- IMCASEL 019, IMCA M 187, *Guidelines for lifting operations*
- IALA Recommendation O-139, *The marking of man-made offshore structures*, December 2008
- 30 CFR Part 250, *Oil and gas and sulphur operations in the Outer Continental Shelf*
- 30 CFR Part 282, *Operations in the Outer Continental Shelf for minerals other than oil, gas and sulphur*
- 46 CFR Part 108.231, *Design, construction and markings*
- 46 CFR Part 108.486 Subpart D, *Fire extinguishing systems*
- BSEETA&R 627, *Assess/develop inspection methodologies for offshore wind turbine facilities*
- BSEETA&R 633, *Structure, equipment and systems for offshore wind farms on the OCS,* Parts 1 and 2
- BSEETA&R 633, *Template for a safety management system for offshore wind farms on the OCS*
- BSEETA&R 650, *Inspection refinements for offshore wind turbine blades*
- BSEETA&R 651, *Evaluate the Effect of Turbine Period of Vibration Requirements on Structural Design Parameters*
- BSEETA&R 656, *Seabed Scour Considerations*
- BSEETA&R 670, *Design Standards for Offshore Wind Farms*
- BSEETA&R 671, *Offshore Electrical Cable Burial for Wind Farms: State of the Art; Standards and Guidance; Acceptable Burial Depths and Separation Distances; and Sand Wave Effects*
- EN50308, *Wind turbines. Protective measures. Requirements for design, operation and maintenance*
- GL Renewables Certification, *Guideline for the certification of offshore wind turbines*
- ASCE Manual 101, *Underwater investigations standard practice manual*

A.3 Terms and Definitions

No additional information.

A.4 Symbols and Abbreviated Terms

No additional information.

A.5 Structural Reliability

A.5.1 General

Section 5 of this document provides an adaptation of the IEC 61400-3 for use in U.S. OCS and U.S. State waters. It is intended that this document be used in conjunction with IEC 61400-3 to form a complete guideline. The information contained in Section 5 provides exceptions, additions, and revisions to IEC 61400-3 and does not replicate provisions in IEC 61400-3 that are considered directly applicable to the application in U.S. waters.

A.5.2 Hierarchy

No additional information.

A.5.3 Design Format

No additional information.

A.5.4 Standards for Component Design

Although API RP 2A-WSD is not an LRFD standard, it is used more frequently than the ISO standards in the United States for the design of offshore oil and gas platforms.

A.5.5 Exposure Categories

It is not a requirement that all of the OWT support structures in an offshore wind facility have the same exposure category. For example, the loss of an OWT support structure over which an export cable passes could disrupt all of the power production from an offshore wind facility. There is considerable justification for considering an OWT as a high consequence of failure category. In the same project, another OWT support structure would be considered as medium consequence category assuming its loss only disrupts its individual power production, along with that of the other OWTs sharing the array cable. The percentage of total project power production lost that is required for an OWT to be considered as high consequence exposure will vary with the specifics of the project, and is left as a decision for the developer.

Medium consequence exposure is selected as the minimum category for support structures directly involved in power production in order to provide a reasonable basis for design and to ensure public safety and environmental protection. Other factors that may warrant consideration in the selection of the exposure category include the reliability of power supplied to the grid, public perception, investment in the project, and revenue generation. In addition, even if a collapsed structure is not replaced, the expense of its removal and sea floor cleanup may be greater and will occur sooner than if it had survived for the planned life of the offshore wind facility. The developer should consider these factors and may adjust the exposure category to high consequence as warranted.

It should be mentioned that the risk associated with an offshore wind facility is considered low compared to other industries such as oil and gas. This issue was addressed considerably in the National Academies 2011 report “Structural Integrity of Offshore Wind Turbines: Oversight of Design, Fabrication, and Installation.” As offshore wind facilities have a low exposure to human life and environmental consequences (e.g. oil spills), the exposure consequence is mostly based on an assessment of policy consequences and the impact it may have on the facility’s ability to deliver energy reliably.

A.5.6 Wind Turbine Classes

No additional information.

A.5.7 Design Methods

No additional information.

A.5.8 Soil Variation

In the design of most structures not supporting wind turbines, obtaining a lower bound estimate of foundation capacity and stiffness is of greater interest than an estimate of the most likely capacity and stiffness. Accordingly, soil sampling, testing, and analysis methods are typically biased to produce conservative estimates of foundation strength and stiffness. However, in the case of wind turbine design, a lower bound estimate of soil stiffness may result in inaccurate estimates of structural mode frequencies, leading to an underestimate of the dynamic loads generated by the rotor while operating. It is essential, therefore, that wind turbine design consider the range of possible soil stiffness.

A.5.9 Tropical Cyclones

While awaiting the results of site-specific assessments of environmental conditions, the designer is advised to refer to API RP 2MET for the definition and relationship of wind and wave conditions in locations subject to tropical cyclones.

The metocean conditions associated with tropical cyclones typically exhibit greater variability (a larger coefficient of variation) than those associated with extra-tropical storms. In these cases, a higher environmental load factor, would be required to achieve a level of overall structural reliability that is consistent with the basis of IEC 61400-3. Accordingly, the designer should address the larger wind and wave COV as part of the metocean data studies. The selection of the design environmental conditions based on the associated wind and wave conditions during tropical cyclones and increased environmental load factor, as appropriate, should be used for the design load cases representing extreme wind and wave conditions specified in the IEC61400-3 for the design of wind turbine support structures. Other issues discussed in ISO 19902, Section A.9.9.3, and its references (e.g., life safety and consequence of failure), as well as the return period of the design conditions, should also be considered in this process.

BSEETA&R Project 670, *Design standards for offshore wind farms*, studied design requirements for offshore wind turbines on the US OCS. Design load cases with an increased design requirement are recommended to address the effect of tropical cyclones (hurricanes).

Design criteria for offshore wind turbines subject to tropical cyclones are also specified in the American Bureau of Shipping(ABS)*Guide for building and classing bottom-founded offshore wind turbine installations*.

A.5.10 Extreme Wave Height

No additional information.

A.5.11 Monopiles, Non-Jacket and Minimal Support Structures

Offshore wind facilities typically include support structure types (e.g., monopiles) that do not have reserve strength or redundancy equivalent to the conventional jacket structures assumed in developing the provisions of offshore structural standards. API RP 2A-WSD, Section 19 provides special design and installation recommendations to compensate for the lower reserve strength or redundancy when using the WSD method. These recommendations include reducing allowable stresses by 15% for monopile type platforms or other single-element structural systems. In addition, monopile-type foundations should be shown to be able to sustain lateral overloads 50% greater than the design lateral loading without collapsing.

Measures similar to those in API RP 2A-WSD may be applied when designing with other standards. ISO 2394 and ISO 19900 establish a consequence of failure factor (γ_n) suitable for use with partial factor design standards such as ISO 19902. For example, use of the consequence of failure factor is seen in IEC 61400-1, Section 7.6.2. In designing to ISO 19902, a consequence of failure factor of 1.18 would be equivalent to the 15% reduction in allowable stresses of API RP 2A-WSD. The consequence of failure factors should be multiplied together for cases in which the design standard also specifies a consequence of failure factor to account for the importance of the entire support structure, or for which a value is specified according to life-safety and environmental or economic consequences of platform failure.

In addition, a fatigue strength analysis shall be obligatory for all structures, independent of natural period.

A.5.12 Deck Clearance

Damage to Gulf of Mexico structures during the hurricanes of 2004 and 2005 indicated that the deck clearance provisions in the 21st and earlier editions of API RP 2A were insufficient.

Interim API documents issued in 2007 increased the design wave for some parts of the Gulf of Mexico and required additional calculations to allow for local random wave crests for structures in all areas of the Gulf. Subsequent studies have shown that clearing the crest of the 1,000-year return period wave also provides sufficient allowance for local random wave crests. This latter approach saves the designer from having to perform additional calculations that increase opportunity for error. As of 2012, the 22nd edition of API RP 2A-WSD is the only design guidance incorporating the 1,000-year return period wave approach to deck clearance. Therefore, its provisions are required regardless of the offshore standard selected to govern the overall design of the platform. Although protecting structures in the Gulf of Mexico was the focus of the deck clearance studies, tropical cyclone behavior in other U.S. waters is believed to be similar enough to allow recommending the same approach for those areas as well.

A.5.13 Grouted Connections

Typically, the geometric parameter ratios of the grouted connections between OWT transition pieces and piles are far outside the ranges investigated in the testing used to develop the design recommendations in recognized offshore standards. The inadequate performance exhibited by some OWT connections has led to additional research. As of June 2012, DNV document DNV OS J101, Section 9 is the only standard incorporating the results of this research.

A.6 Manufacturing and Fabrication

A.6.3 Offshore Transmission Grid or Backbone

An offshore electrical transmission grid is an extension of a land-based grid system that consists of an HVDC submarine cable system running parallel to the coastline adjacent to wind energy areas where offshore wind facilities are either located or proposed. Such an HVDC grid extension will generally consist of a series of offshore hubs. At each hub location, an offshore foundation supports an HVDC converter. Ties to the onshore part of the grid consist of lateral HVDC submarine cable links routed to shore from the converter hub to interconnect to strategic locations in the onshore grid. When utilizing the offshore grid extended system to transfer offshore wind generation to shore, the high-voltage alternating current(AC) export cable(s) from the wind facility's electric service platform(s) would be routed to the hub closest to that electric service platform location. The converter, which is part of the grid, converts the AC power to DC, and the power is dispatched to where it is required on the rest of the grid. HVDC converters are installed adjacent to the onshore part of the grid where the power is once again converted back to AC for end-user consumption on shore. This approach to offshore transmission allows for the networking of individual offshore wind facility production which has the potential for improved overall system utilization.

A.7 Installation

A.7.1 General

General guidance on marine transportation and installation can be found in ISO 19901-6 (2009),*Petroleum and natural gas industries—Marine operations*.

A.7.2 Sea Transport

A.7.2.1 Loadout

IMCASEL 019 and IMCA M 187 provide additional guidance and considerations useful for conducting lifted loadouts.

A.7.2.1.1 Submarine Cable Installation

Cable installation associated with an offshore wind facility can be split into two groups: one for the inter-array cables and one for export cables.

Inter-array cables connect the individual wind turbines in strings with the site electric service platform.13 The number of these strings depends on the size of the wind facility and the field layout. Individual inter-array cables (roughly turbine spacing) are typically between 650m and 1,000m in length, and will require both ends of the cable to be pulled into the offshore support structure through either an internal or external J-tube. Longer cables may be used to connect a string to the electric service platform. These cables may require a different power rating due to the additional length and accumulation of each turbine's output.

Inter-array cables tend to be installed and then post-lay buried using an ROV equipped with a hydro-jetting tool or mechanical cutter. This technique is preferred due to the relatively short length each inter-array cable will run between turbines and due to the need to bury the cable at a specified depth for as much of that run as possible. There are, however, other techniques for which the cable can be laid and buried simultaneously, the most common of which are cable plows and vertical injectors.

Export cables run from the electric service platform and connect the offshore wind facility into the terrestrial grid. Currently, most offshore wind facilities connect with the onshore utility transmission system through AC submarine cable systems (typically 132 kV). As the distance between the offshore wind facility and the onshore interconnection increases, the limitations of high-voltage alternating current (HVAC) technology become apparent. The crossover threshold between HVAC and HVDC is between 50km and 100km and will be decided on as part of the project design/pre-engineering scope of work.

Depending on the total output power of the of the wind farm facility, HVAC export cable systems require either a single three-core cable or multiple three-core cables for power transmission, which allows for the option of the cables to be installed and buried in a single operation using a jetting plow or injector. It is more cost effective to simultaneously lay and bury the export cables; however, some cable designs do not allow themselves to be buried by plow, and the design of the cable needs to be closely considered when choosing both the cable and method of installation.

HVDC systems require two cables as a bi-pole system; the cables will typically be bundled together during the installation process. Bundled HVDC cables and inter-array cables are typically installed and buried, as are inter-array cables.

A.7.2.1.2 Cable Protection

Additional vehicles used for submarine operations include the following:

- ROV: Equipped with either a jetting system for softer clays and sands or a mechanical cutting tool (either a wheel or chain fitted with picks) for compacted seabeds through to rock, this category encompasses traditional deep water tracked or free flying ROVs that use onboard hydro jetting equipment, as well as shallow water tracked trenchers that use either hydro or mechanical trenching methods. ROVs predominantly post-lay bury cable, although some shallow water trenchers are capable of simultaneous lay and burial. Post-lay burial using an ROV is the preferred method of protecting bundled cable packages.
- Submarine Plow: This plow is a towed system with a limited ability to steer around obstacles; it relies on the host vessel to pull it along the cable route. Burial is by means of passive share using the long-beam plowing approach and can be assisted by the inclusion of onboard water jetting equipment to reduce tow tension, increase burial depth, and increase speed over ground. Submarine plows are used predominantly on export cables and occasionally longer inter-array cables. They simultaneously lay and bury and therefore require careful cable handling and tension management during operations. Submarine plows are generally not suitable for the installation of bundled cables.
- Jetting Sled: A jetting sled is similar to the plow except that the share is replaced with jetting swords and burial is achieved by displacing the seabed with low-to high-pressure

13 This may also be referred to as the Offshore Transformer Station.

water jets depending on seabed soil characterization. Used in shallow water, predominantly for the burial of export cables, jetting sleds use surface supplied water jetting equipment and can be deployed from smaller vessels than can plows or ROVs. Installation methodology is predominantly simultaneous lay and burial.

General characteristics for the above burial methods can be found in table 1.

Table 1: Cable protection equipment characteristics

Equipment	Burial Method	Seabed Type***	Operational Water Depth***	Burial Depth*	Preferred Method
ROV trencher	Hydro jetting	Sand and clay up to 75kPa	5m to 2,000m	Up to 3.0m	Export + IA
ROV tractor	Mechanical cutting	Up to 40MPa	Up to 500m	Up to 3.0m	Export + IA
ROV tractor	Hydro jetting	Up to 75kPa	Up to 500m	Up to 3.0m	Export + IA
Jetting sled—surface mounted power pack	Hydro jetting	Up to 75kPa	0 to 50m**	Up to 5.0m	Export
Jetting sled—vehicle mounted power pack	Hydro jetting	Up to 75kPa	5m to 50m**	Up to 5.0m	Export
Plow	Passive	Up to 75kPa	Up to 500m	Up to 3.0m	Export
Plow	Hydro jetting	Up to 75kPa	Up to 500m	Up to 3.25m	Export

*Typical values; dependent upon vehicle setup and seabed conditions
**Generally maximum depth constrained by diver limitations
***Dependent upon machine specification

Seabed classifications can be found in the following document:

- ISO14688-1:2002, *Geotechnical investigation and testing—Identification and classification of soil—Part 1: Identification and description* and ISO14688-1:2004 Part 2: Principles for a classification

Other methods of protection include the following:

Mattressing: Segmented concreted blocks latticed together to form a durable, flexible mattress to be laid down over the cable; normally used at cable crossing and deployed by crane with either diver or ROV intervention

Rock Placement: The placement of varying sizes of stones/cobble through to rocks that form a protective barrier from external mechanical influence

Impact Protection: A type of polyurethane protective sleeve added in sections to the cable; not very resistant to anchor drags, normally used as an initial layer of protection from mattresses and rock placement

Split Pipe: Similar to impact protection, but usually ferrous iron made segments offering alternative to burial. Can be susceptible to anchor and fishing drag.

At the wind-turbine foundations the cable will be protected by bend restrictors. Careful consideration will need to be given to the design and installation of the cables, bend restrictors, J-tube centralizer, and seal. The choice of cable protection can have a significant impact on installation speed and overall project timing.

A.7.2.1.3 Cable Burial

Additional guidance on cable burial depth can be found in the BSEETA&R Report Number 671 titled: *Offshore electrical cable burial for wind farms: State of the art, standards and guidance and acceptable burial depths, separation distances and sand wave effect.*

A.8 Qualification Testing

No additional information.

A.9 Safety Management System, Safety Equipment, and Navigational Aids

A.9.1 U.S. Regulations

No additional information.

A.9.2 Safety Management System

BSEETA&R 633 provides a template for a suitable SMS.

A.9.3 Safety Equipment

Additional guidance can be found in EN50308, *Wind turbines—Protective measures—Requirements for design, operation and maintenance.*

It is recommended that the emergency stay requirement be met via access to a manned electric service platform rather than by provisions for workers to remain on a turbine facility itself.

A.9.4 Access Safety

A.9.4.1 Vessel Access Safety

Information on limiting conditions for access to the OWTs with the current generation of access vessels and OWT support structures is reported in the literature: Department of Business Enterprise & Regulatory Reform; Offshore Wind Capital Grants Scheme—Scroby Sands Offshore Wind Farm 3rd annual report 2007; Garrad Hassan Report to U.S. Corps of Engineers: Review of Offshore Wind Project Features Appendix 3-F; and Blyth Harbour Wind Farm—Operational Aspects, Report of DTI, 2004.

A.9.4.2 Helicopter Access Safety

No additional information.

A.9.4.3 Tower Access Safety

Consideration of the USCG proposed regulation 33 CFR 143.1341 (see Section A.2 of this Annex) is recommended.

A.9.5 Navigational Warning Devices and Marking Information

Useful guidance can be found in IALA Recommendation O-139, *The marking of man-made offshore structures*.

A.10 Operations and In-Service Inspections

A.10.1 U.S. Regulations

U.S. Regulations 30 CFR Parts 250 and 282 address BOEM and BSEE requirements for the extraction of minerals from the U.S. OCS, some of which may be useful for offshore wind facilities.

Note that under Section 10 of the Rivers and Harbors Act of 1899, the Army Corps of Engineers (ACOE) regulates structures and/or work in, over, or under navigable waters of the U.S. or affecting the course, location, or condition of navigable waters of the U.S. The line of jurisdiction in tidal waters extends from the Mean High Water Mark along the shoreline to 3nautical miles (n.m.) offshore. Under the Outer Continental Shelf Lands Act, with ACOE Section 10 authority is extended to the Outer Continental Shelf, from 3 n.m. to the seaward limit of the OCS (approx. 200 n.m.). ACOE has jurisdiction over the following: artificial islands,

installations, and other devices located *on* the seabed of the OCS. Under Section 404 of the Clean Water Act, the Corps regulates the discharge of dredged or fill material into Waters of the United States. The ACOE line of jurisdiction in tidal waters extends from the High Tide Line along the shoreline to 3n.m. offshore. This authority does not extend to the OCS.

A.10.2 Operations

No additional information.

A.10.3 In-Service Inspections

A.10.3.1 General

No additional information.

A.10.3.2 Frequency of Inspections

These references prescribe inspection frequency intervals for above- and below-water systems.

- ASCE Manual 101, *Underwater investigation: Standard practice manual* (Table 2-2, Recommended Maximum Interval Between Underwater Routine Inspections),
- API RP 2SIM, *Structural integrity management of fixed offshore structures*
- BSEETA&R 627, Table II.1, *Inspection cycles*
- DNV-OS-J101, Section 13, *In-service inspection, maintenance and monitoring*
- ABS *Guide for building and classing bottom-founded offshore wind turbine installations*—Chapter 1, Section 3, *Surveys after construction*

A.10.3.3 Qualifications of Inspection Personnel

ASCE Manual 101 provides guidance on qualifications of underwater inspection personnel.

A.10.3.4 Subsea Support Structure Inspections

No additional information.

A.10.3.5 Subsea Equipment Inspections

No additional information.

A.10.3.6 Above-Water Support Structure and Access Systems

No additional information.

A.10.3.7 Blades

No additional information.

A.10.3.8 Inspection Scope Expansion

ASCE Manual 101 provides guidance on expanding scope based on inspection findings using the term “special inspection.”

A.11 Decommissioning

A.11.1 U.S. Regulations

30 CFR 250.902, 30 CFR 250.1725, and 30 CFR 250.1752 address BOEM and BSEE requirements for decommissioning of platforms and pipelines used for extracting oil, gas, and sulfur from U.S. OCS waters, but some of their provisions may also be appropriate for offshore wind facilities.